COMPACT V/f & SENSORLESS INVERTER

BDI50

English

User manual

Rev. 0.5 – 13-1-2017

1S6BDIEN

GEFRAN

Software version

This manual is updated according the software version V 1.04

The identification number of the software version is indicated on the identification plate of the drive or can be checked with the par. 13.01.

Thank you for choosing this Gefran product.

We will be glad to receive any possible information which could help us improving this manual. The e-mail address is the following: techdoc@ gefran.com.

Before using the product, read the safety instruction section carefully.

Keep the manual in a safe place and available to engineering and installation personnel during the product functioning period.

Gefran S.p.A has the right to modify products, data and dimensions without notice.

The data can only be used for the product description and they can not be understood as legally stated properties.

All rights reserved

Table of Contents

Chapter 0	**Preface**	0-1
	0.1 Preface	0-1
Chapter 1	**Safety Precautions**	1-1
	1.1 Before Power UP	1-1
	1.2 During Power UP	1-2
	1.3 Before Operation	1-2
	1.4 During Operation	1-3
	1.5 Inverter Disposal	1-3
Chapter 2	**Part Number Definition**	2-1
	2.1 Model part number	2-1
	2.2 Standard Product Specification	2-2
Chapter 3	**Environment & Installation**	3-1
	3.1 Environment	3-1
	3.2 Installation	3-3
	3.2.1 Installation methods	3-3
	3.2.2 Installation space	3-6
	3.2.3 Derating curves	3-9
	3.2.4 Capacitor reforming Guide after long storage	3-10
	3.3 Wiring guidelines	3-11
	3.3.1 Main considerations	3-11
	3.3.2 Power cables	3-13
	3.3.3 Control cable selection and wiring	3-13
	3.3.4 Wiring and EMC guidelines	3-14
	3.3.5 Failure liability	3-15
	3.3.6 Considerations for peripheral equipment	3-17
	3.3.7 Ground connection	3-18
	3.4 Specifications	3-19
	3.4.1 Product Specifications	3-19
	3.4.2 General Specifications	3-21
	3.5 Standard wiring	3-23
	3.5.1 200V Single phase (NPN input)	3-23
	3.5.2 200V Single phase (PNP input)	3-24
	3.5.3 230V Three phase (NPN input)	3-25
	3.5.4 400V Three phase (PNP input)	3-26
	3.5.5 400V Three phase (NPN input)	3-27
	3.6 Terminal Description	3-29
	3.6.1 Description of main circuit terminals	3-29
	3.6.2 Control circuit terminal description	3-30
	3.7 Dimensions and weight	3-32
	3.8 EMC filter Disconnection	3-37
Chapter 4	**Software Index**	4-1
	4.1 Keypad Description	4-1
	4.1.1 Operator Panel Functions	4-1

	4.1.2 Digital Display Description	4-2
	4.1.3 Digital Display Setup	4-4
	4.1.4 Example of Keypad Operation	4-6
	4.1.5 Operation Control	4-8
	4.2 Programmable Parameter Groups	4-9
	4.3 Parameter Function Description	4-24
Chapter 5	**Troubleshooting and Maintenance**	5-1
	5.1 Error Display and Corrective Action	5-1
	5.1.1 Manual Reset and Auto-Reset	5-1
	5.1.2 Keypad Operation Error Instruction	5-3
	5.1.3 Special conditions	5-4
	5.2 General troubleshooting	5-5
	5.3 Routine and periodic inspection	5-6
	5.4 Maintenance	5-7
Chapter 6	**Accessories**	6-1
	6.1 Input choke Specifications	6-1
	6.2 Output choke Specifications	6-1
	6.3 Fuse Specification	6-1
	6.4 Fuse Specification (UL Model Recommended)	6-2
	6.5 Braking Resistor	6-3
	6.6 Copy Unit (KB-BDI/VDI)	6-4
	6.7 Communication options	6-4
	6.8 RJ45 to USB connecting Cable (1.8m)	6-5
Appendix 1	**BDI50 Parameters Setting List**	App1-1
Appendix 2	**Instructions for UL**	App2-1
Appendix 3	**BDI50 Communication protocols**	App3-1
	Modbus communication protocol	App3-1
	BACnet communication protocol	App3-18
Appendix 4	**Cable RJ45 to USB instruction manual**	App4-1
Appendix 5	**BDI50 series accessories manual**	App5-1

Chapter 0 Preface

0.1 Preface

To extend the performance of the product and ensure personnel safety, please read this manual thoroughly before using the inverter. Should there be any problem in using the product that cannot be solved with the information provided in the manual, contact our technical or sales representative who will be willing to help you.

※Precautions

The inverter is an electrical product. For your safety, there are symbols such as “Danger”, “Caution” in this manual as a reminder to pay attention to safety instructions on handling, installing, operating, and checking the inverter. Be sure to follow the instructions for highest safety.

Danger	Indicates a potential hazard that could cause death or serious personal injury if misused.
⚠ Caution	Indicates that the inverter or the mechanical system might be damaged if misused.

Danger
➢ Risk of electric shock. The DC link capacitors remain charged for five minutes after power has been removed. It is not permissible to open the equipment until 5 minutes after the power has been removed. ➢ Do not make any connections when the inverter is powered on. Do not check parts and signals on circuit boards during the inverter operation. ➢ Do not disassemble the inverter or modify any internal wires, circuits, or parts. ➢ Ensure that the Inveter Ground terminal is connected correctly.

⚠ Caution
➢ Do not perform a voltage test on parts inside the inverter. High voltage can destroy the semiconductor components. ➢ Do not connect T1, T2, and T3 terminals of the inverter to any AC input power supply. ➢ CMOS ICs on the inverter’s main board are susceptible to static electricity. Do not touch the main circuit board.

Chapter 1 Safety Precautions

1.1 Before Power Up

Danger
➢ Make sure the main circuit connections are correct. Single phase L1(L),L3(N), and Three phase L1(L),L2,L3(N); 400V : L1,L2,L3 are power-input terminals and must not be mistaken for T1,T2 and T3. Otherwise, inverter damage can result.

Caution
➢ The line voltage applied must comply with the inverter's specified input voltage.(See the nameplate) ➢ To avoid the front cover from disengaging, or other damge do not carry the inverter by its covers. Support the drive by the heat sink when transporting. Improper handling can damage the inverter or injure personnel and should be avoided. ➢ To avoid the risk of fire, do not install the inverter on a flammable object.Install on nonflammable objects such as metal. ➢ If several inverters are placed in the same control panel, provide heat removal means to maintain the temperature below 50 degree C to avoid overheat or fire. ➢ When disconnecting the remote keypad, turn the power off first to avoid any damage to the keypad or the inverter.

Warning
➢ This product is sold subject to EN 61800-3 and EN 61800-5-1. In a domestic environment this product may cause radio interference in which case the user may be required to apply corrective measures. ➢ Motor over temperature protection is not provided.

Caution
➢ Work on the device/system by unqualified personnel or failure to comply with warnings can result in severe personal injury or serious damage to material. Only suitably qualified personnel trained in the setup, installation, commissioning and operation of the product should carry out work on the device/system. ➢ Only permanently-wired input power connections are allowed.

1.2 During Power Up

Danger

- When the momentary power loss is longer than 2 seconds, the inverter will not have sufficient stored power for its control circuit. Therefore, when the power is re-applied, the run operation of the inverter will be based on the setup of following parameters:
  - Run parameters. 00-02 or 00-03.
  - Direct run on power up. Parameter. 07-04 and the status of external run switch,

  Note-: the start operation will be regardless of the settings for parameters 07-00/07-01/07-02.

  Danger. Direct run on power up.

  If direct run on power up is enabled and inverter is set to external run with the run FWD/REV switch closed then the inverter will restart.

  Danger

  Prior to use, ensure that all risks and safety implications are considered.

- When the momentary power loss ride through is selected and the power loss is short, the inverter will have sufficient stored power for its control circuits to function, therefore,when the power is resumed the inverter will automatically restart depending on the setup of parameters 07-00 & 07-01.

1.3 Before Operation

Caution

- Make sure the model and inverter capacity are the same as that set in parameter 13-00.

Note : On power up the supply voltage set in parameter 01-01 will flash on display for 2 seconds.

1.4 During Operation

Danger

- Do not connect or disconnect the motor during operation. Otherwise, It may cause the inverter to trip or damage the unit.

Danger

- To avoid electric shock, do not take the front cover off while power is on.
- The motor will restart automatically after stop when auto-restart function is enabled. In this case, care must be taken while working around the drive and associated equipment .
- The operation of the stop switch is different than that of the emergency stop switch. The stop switch has to be activated to be effective. Emergency stop has to be de-activated to become effective.

Caution

- Do not touch heat radiating components such as heat sinks and brake resistors.
- The inverter can drive the motor from low speed to high speed. Verify the allowable speed ranges of the motor and the associated machinery.
- Note the settings related to the braking unit.
- Risk of electric shock. The DC link capacitors remain charged for five minutes after power has been removed. It is not permissible to open the equipment until 5 minutes after the power has been removed.

Caution

- The Inverter should be used in environments with temperature range from -10… +40°C / 14…104℉ (size 1) or -10…+50°C / 14…122℉ (all other sizes) and relative humidity of 95%.

Danger

- Make sure that the power is switched off before disassembling or checking any components.

1.5 Inverter Disposal

Caution

Please dispose of this unit with care as an industrial waste and according to your required local regulations.

- The capacitors of inverter main circuit and printed circuit board are considered as hazardous waste and must not be burnt.
- The Plastic enclosure and parts of the inverter such as the cover board will release harmful gases if burnt.

Chapter 2 Part Number Definition

2.1 Model part number

BDI50 -X XXX -K X X -X -Y -Y

EMC Filter:	F = included; [Empty] = not included
PNP / NPN:	N = NPN input; P = PNP input; NP = PNP and NPN
Rated voltage:	2M = 230 Vac, 1ph; 2T = 230 Vac, 3ph; 4 = 400 Vac, 3ph
Software:	X = standard
Braking unit:	B = included; X = not included
Keypad:	K = Integrated (LED keypad with 5-digits 7-segment display)
Drive power, in kW	
Mechanical drive sizes	
BDI50 drive series	

2.2 Standard Product Specification

Model	Supply Voltage (Vac)	Frequency (Hz)	(HP)	(kW)	Model		EMC Filter		Braking Unit
					NPN	PNP	Built-in	None	Built-in
BDI50-1004-KXX-2M-N	1ph, 200~240V +10%/-15%	50/60Hz	0.5	0.4	◎			◎	
BDI50-1007-KXX-2M-N			1	0.75	◎			◎	
BDI50-2015-KXX-2M-N			2	1.5	◎			◎	
BDI50-2022-KXX-2M-N			3	2.2	◎			◎	
BDI50-1004-KXX-2M-P-F			0.5	0.4		◎	◎		
BDI50-1007-KXX-2M-P-F			1	0.75		◎	◎		
BDI50-2015-KXX-2M-P-F			2	1.5		◎	◎		
BDI50-2022-KXX-2M-P-F			3	2.2		◎	◎		
BDI50-1007-KXX-2T-N	3ph, 200~240V +10%/-15%	50/60Hz	1	0.75	◎			◎	
BDI50-2015-KXX-2T-N			2	1.5	◎			◎	
BDI50-2022-KXX-2T-N			3	2.2	◎			◎	
BDI50-3037-KBX-2T-NP			5	3.7	◎	◎		◎	◎
BDI50-4055-KBX-2T-NP			8	5.5	◎	◎		◎	◎
BDI50-4075-KBX-2T-NP			10	7.5	◎	◎		◎	◎
BDI50-2007-KBX-4-N	3ph, 380~480V +10%/-15%	50/60Hz	1	0.75	◎			◎	◎
BDI50-2015-KBX-4-N			2	1.5	◎			◎	◎
BDI50-2022-KBX-4-N			3	2.2	◎			◎	◎
BDI50-3037-KBX-4-NP			5	3.7	◎	◎		◎	◎
BDI50-3055-KBX-4-NP			8	5.5	◎	◎		◎	◎
BDI50-4075-KBX-4-NP			10	7.5	◎	◎		◎	◎
BDI50-4110-KBX-4-NP			15	11	◎	◎		◎	◎
BDI50-2007-KBX-4-P-F			1	0.75		◎	◎		◎
BDI50-2015-KBX-4-P-F			2	1.5		◎	◎		◎
BDI50-2022-KBX-4-P-F			3	2.2		◎	◎		◎
BDI50-3037-KBX-4-NP-F			5	3.7	◎	◎	◎		◎
BDI50-3055-KBX-4-NP-F			8	5.5	◎	◎	◎		◎
BDI50-4075-KBX-4-NP-F			10	7.5	◎	◎	◎		◎
BDI50-4110-KBX-4-NP-F			15	11	◎	◎	◎		◎

Short circuit capacity is below 5000A/240V or 5000A/480V.
The voltage for 200~240V models is 240V, 380~480V models is 480V.

Chapter 3 Environment & Installation

3.1 Environment

Installation environment has a direct effect on the correct operation and the life expectancy of the inverter, Install the inverter in an environment complying with the following conditions:

Protection	
Protection class	IP20
Suitable environment	
Operating temperature	-10~40°C (size 1) -10~50°C (other sizes) If several inverters are installed in the same control panel, ensure adequate spacing and provide the necessary cooling and ventilation for successful operation.
Storage temperature	-20~60°C
Relative Humidity	Max 95% (without condensation)
Shock	2G (19.6m/s²) for 57~150Hz and below. 0.3mm for 10~57Hz (According to IEC60068-2-6 standard)

Installation site

Install in an environment that will not have an adverse effect on the operation of the unit and ensure that there is no exposure to areas such as that listed below:

- Direct sunlight, Rain or moisture
- Oil mist and salt
- Dust, lint fibres, small metal filings and corrosive liquid and gas
- Electromagnetic interference from sources such as welding equipment
- Radioactive and flammable materials
- Excessive vibration from machines such as stamping, punching machines
- Add vibration-proof pads if necessary

Product Overview

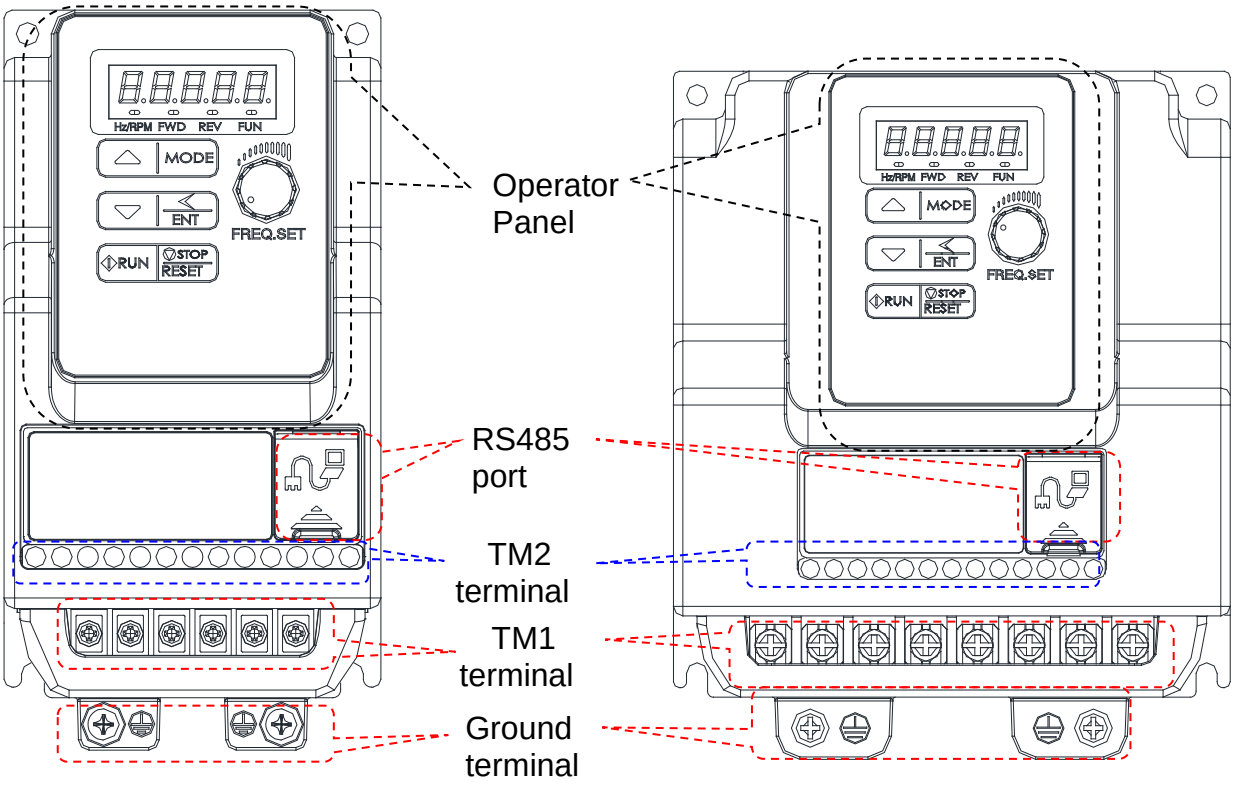

Size 1 **Size 2**

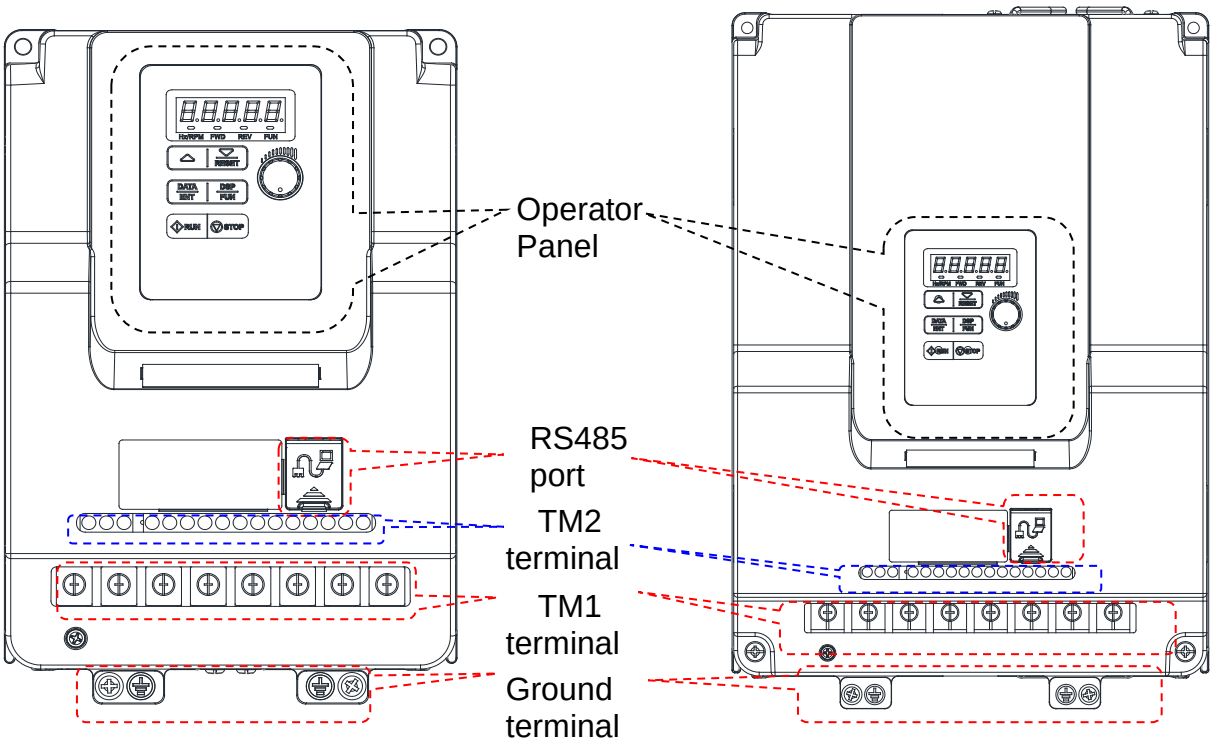

Size 3 **Size 4**

3.2 Installation

3.2.1 Installation methods

Size1. Mounting on a flat surface.

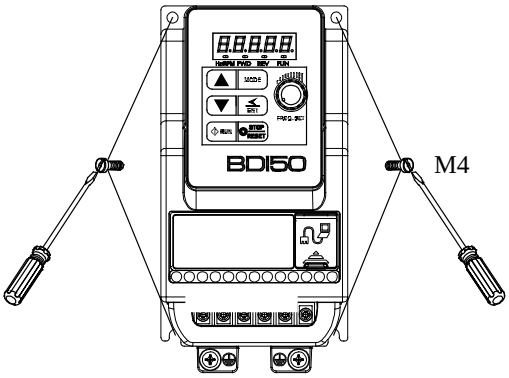

Din rail type installation：

Din rail kit includes a plastic and a metal adaptor plates.

Assembly Steps:

1) Attach the metal adaptor plate to the inverter base with the screws provided.
2) Attach the plastic Din rail adaptor to the metal adaptor plate.
3) Push the plastic adaptor forward to lock into position.

Disassembly Steps:

1) Unlock by pushing the snap hooks
2) Retract and remove the plastic Din rail adaptor.
3) Unscrew the metal plate &Remove

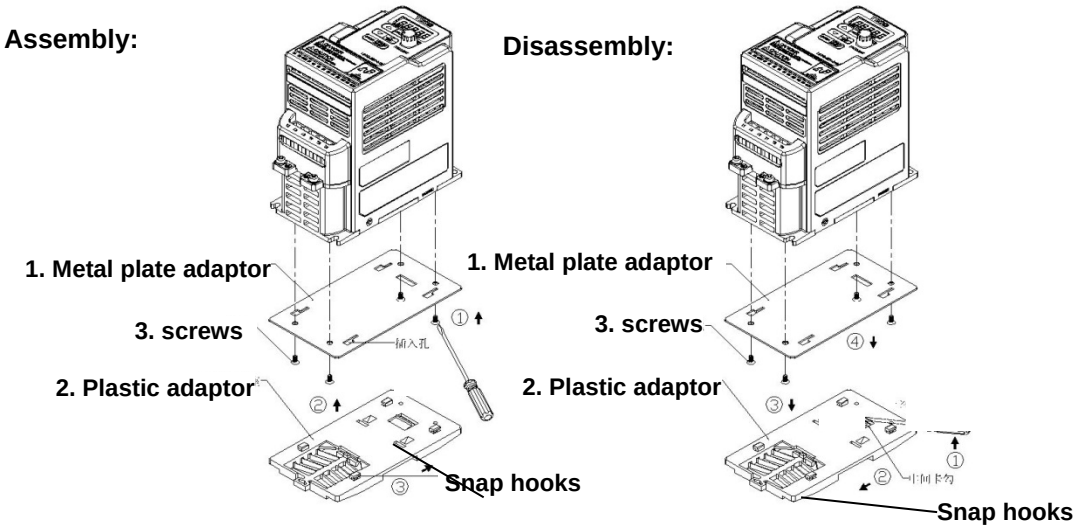

Note：

KIT DIN BDI50 Size 1 (Din rail kit part model), including the following parts

1. Metal plate adaptor

2. Plastic adaptor

3. Chamfer head screw: M3×6

Size 2: Mounting on a flat surface.

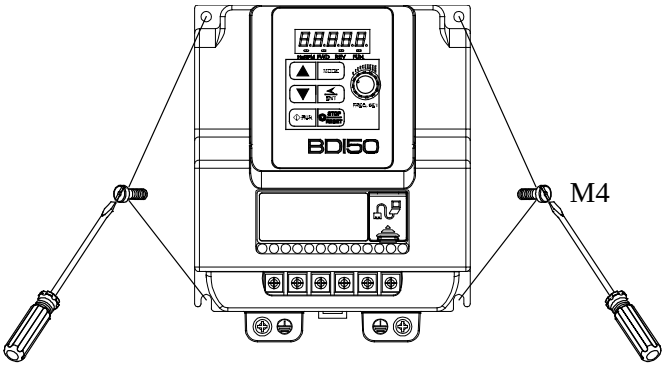

Din rail type installation:

Din rail kit includes a plastic adaptor plate as an attachment for the inverter base. Refer to Diagram below:

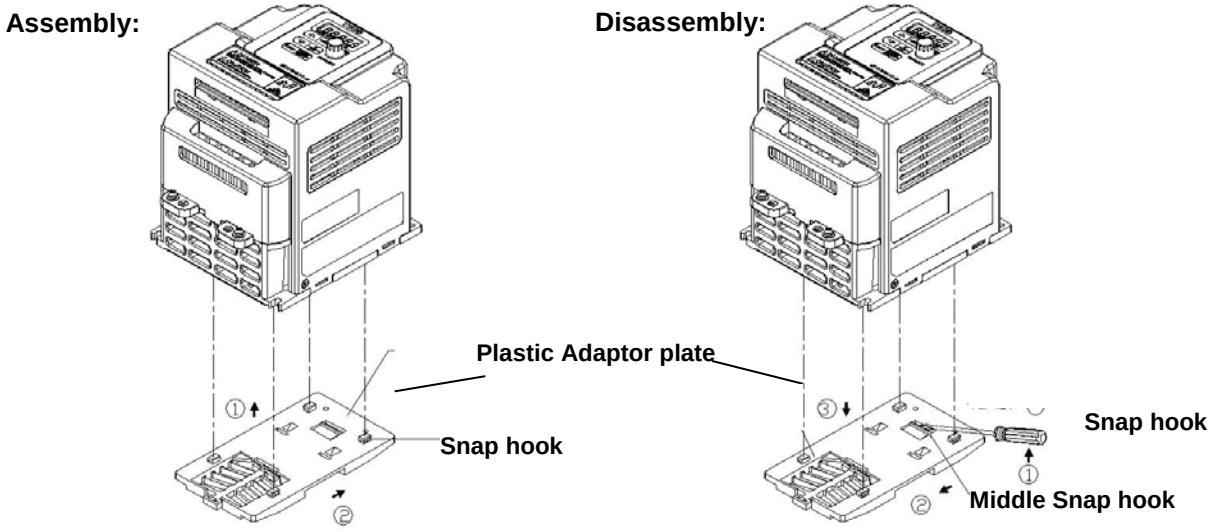

Din Rail Mounting & Dismounting as shown in the diagram below:Use a 35mm Din Rail.

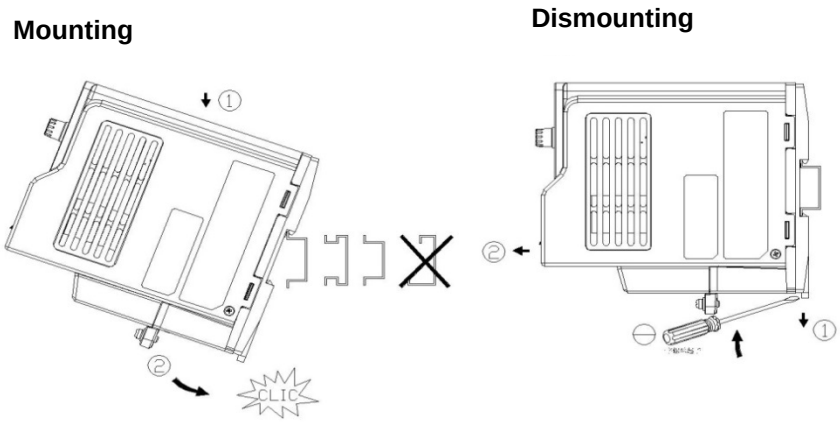

Plastic adaptor plate.
KIT DIN BDI50 Size 2 (Size 2 Din rail kit model)

Size 3. Mounting on a flat surface

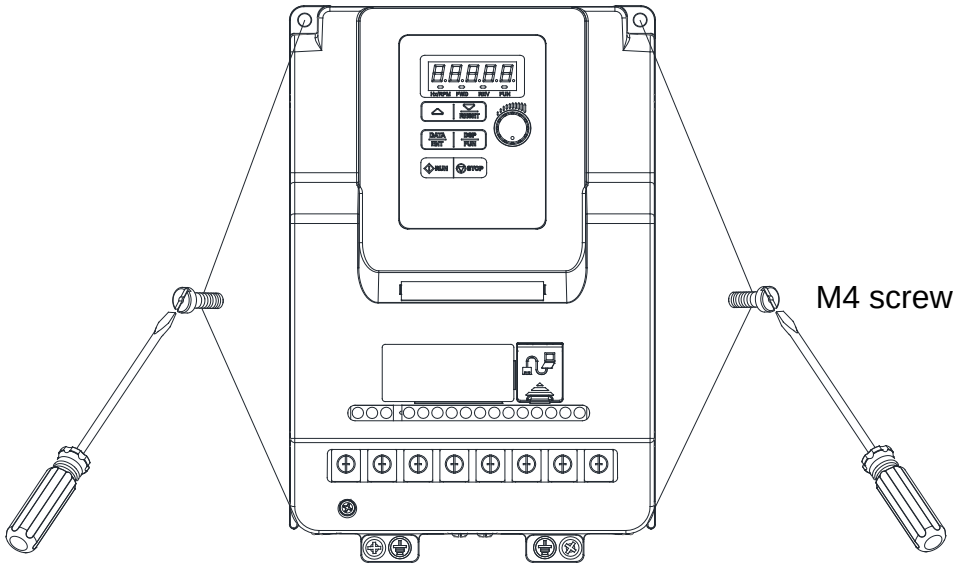

Size 4. Mounting on a flat surface

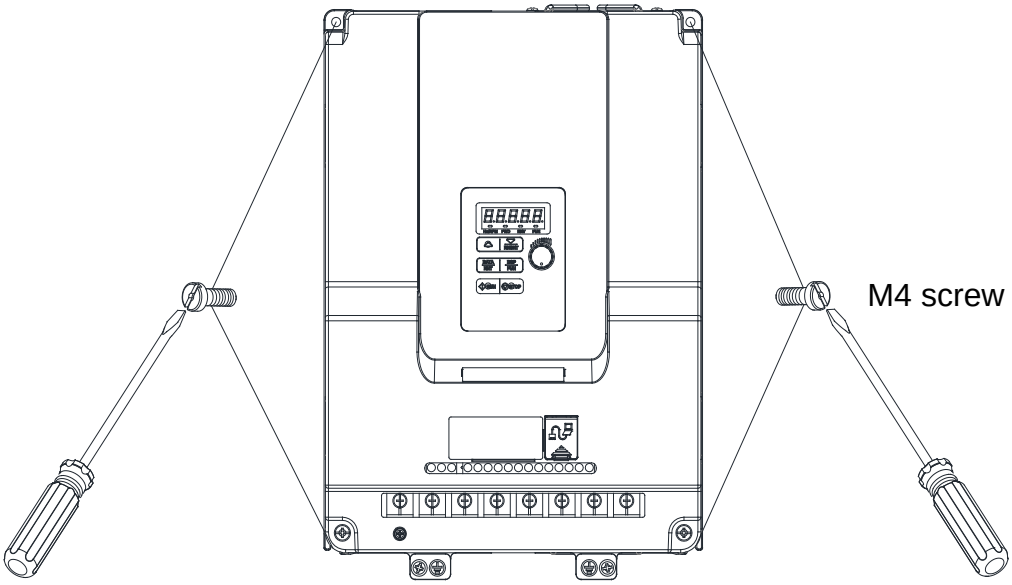

3.2.2 Installation space

Provide sufficient air circulation space for cooling as shown in examples below.
Install the Inverter on surfaces that provide good heat dissipation.

Single unit Installation
Install the inverter verticality to obtain effective cooling.

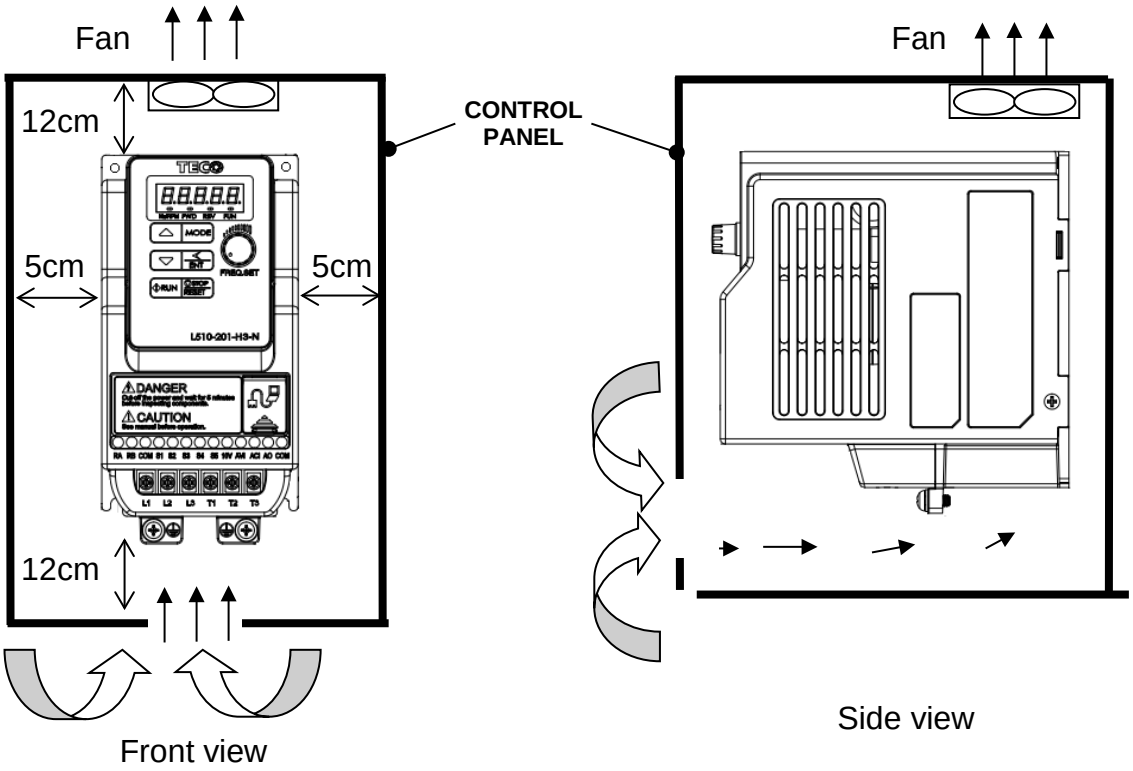

Multiple Installation

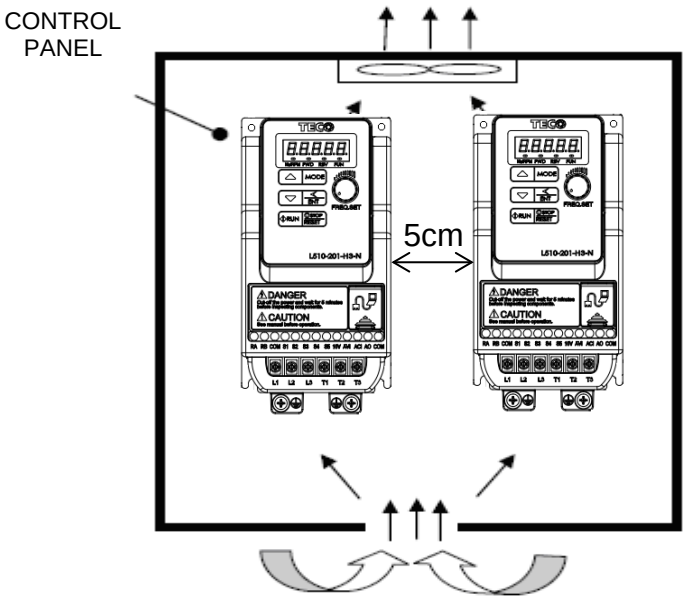

Provide the necessary physical space and cooling based on the ambient temperature and the heat loss in the panel

Installation for Grounding kit

Grounding kit：

As bellowed diagram, use screw to install EMC metal plate into heatsink.

Size 1 Size 2

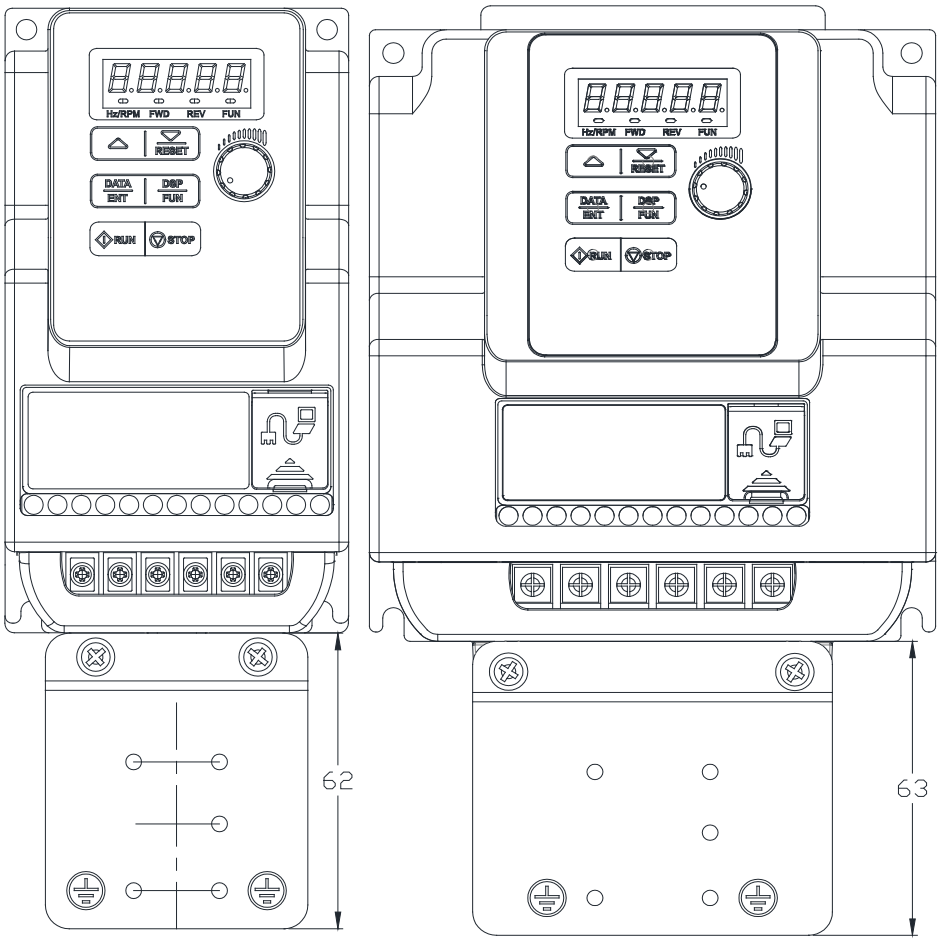

Grounding kit option installation diagram and instruction (Example)

Size 1 Size 2

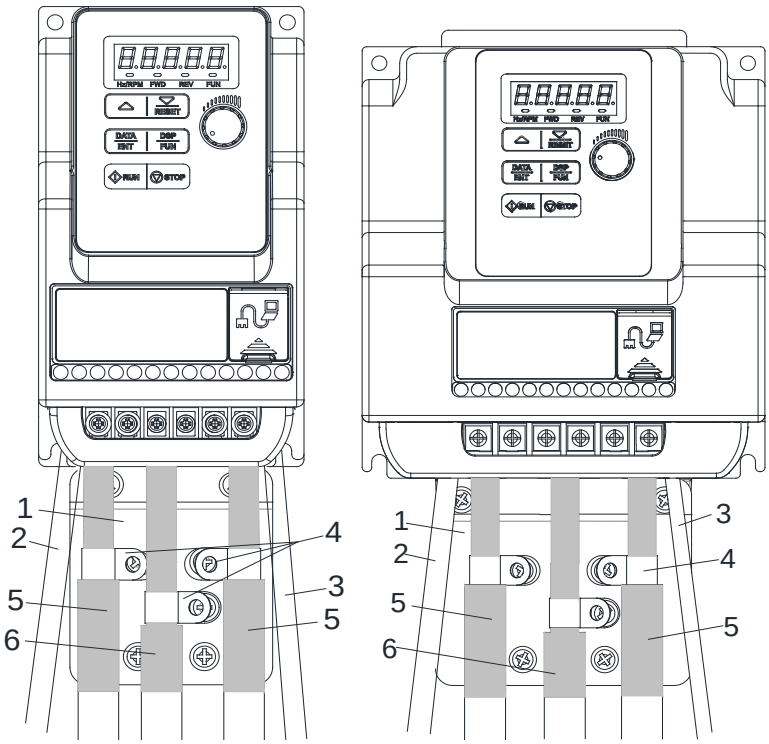

1. Grounding kit to be mounted on the drive (earth casing), please follow the diagram to install.
2. Unshielded power supply lines or cable.
3. Unshielded wires or cable for the output of the relay contacts.
4. Stainless steel cable clamps.
   Attach and earth the shielding of cables 5 and 6 as close as possible to the drive:
   - Strip the cable to expose the shielding;
   - Attach the cable to the plate 1, attaching the clamp on the stripped part of the shielding.

   The shielding must clamped tightly enough to metal sheet to ensure good contact.
5. Shielded power supply cable for connecting motor which connect to earth at both ends. The shielding must be continuous, and if intermediate terminals are used, they must be placed in EMC shielded metal boxes.
6. Shielded cable for control-signal wiring.
   For applications requiring several conductors, use cables with small cross-section (0.5 mm^2, 20 AWG).
   For cables 5 and 6, the shielding must be connected to earth at both ends. The shielding must be continuous, and if intermediate terminals are used, they must be placed in EMC shielded metal boxes.

Notice：

- If using external EMC input filter, it must be mounted under the drive and connected directly to the line supply via an unshielded cable. Link 3 on the drive is then via the filter output cable.
- The HF equipotential earth connection between the drive, motor and cable shielding does not remove the need to connect the PE conductors ⏚ (green-yellow) to the appropriate terminals on each device.

3.2.3 Derating curves

Curves below show the applicable output current derate due to setting of carrier frequency, the ambient operating temperatures of 40 and 50 degree C and installation altitude.

1004-…2M, 1007-…2M/2T (40℃)

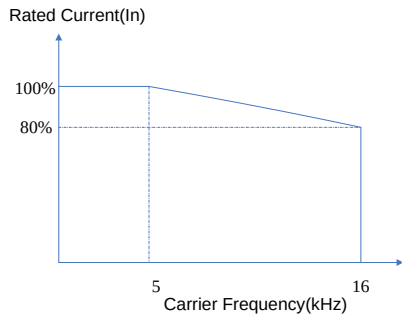

2015/2022-…2M/2T (50℃)

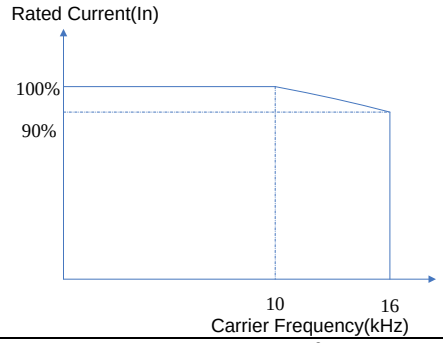

3037/4055-…2T (50℃)

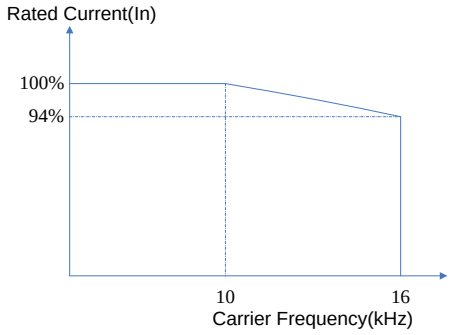

4075-…2T (50℃)

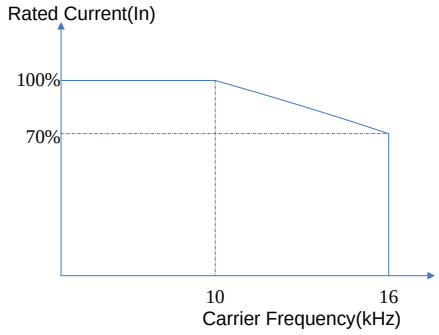

2007/2015/2022-…4 (50℃)

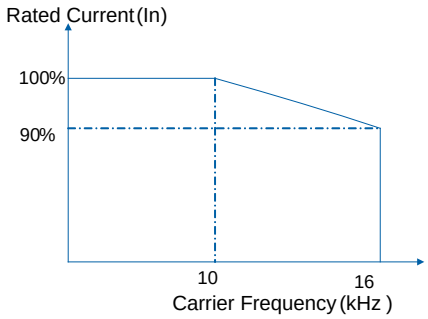

3037-…4 (50℃)

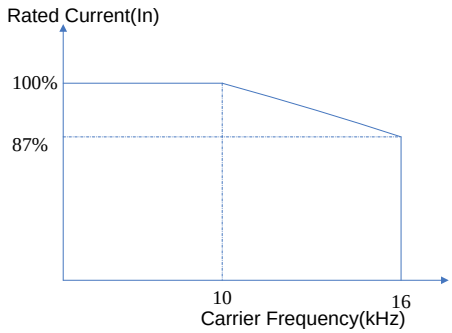

3055-…4 (50℃)

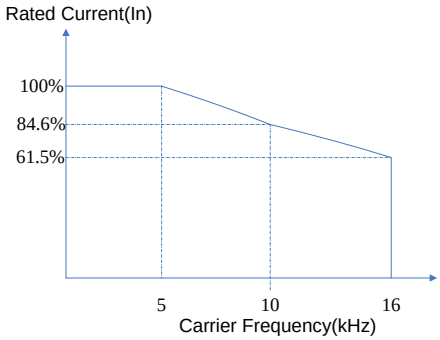

4075-…4 (50℃)

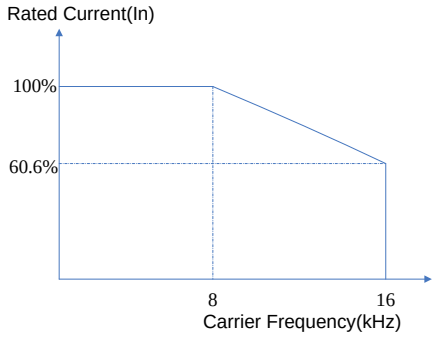

4110-…4 (50℃) 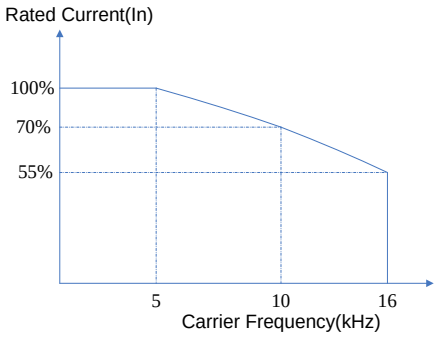 	

Derating curve for altitude

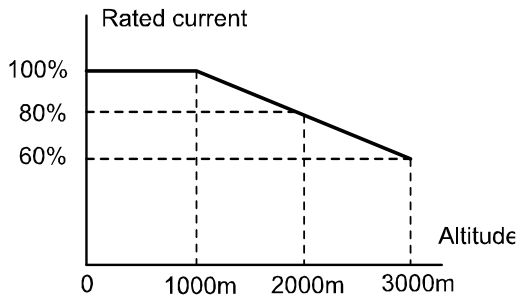

3.2.4 Capacitor reforming Guide after long storage

For correct performance of this product after long storage before use it is important that Inverter Capacitors are reformed according to the guide below:

Storage time	Procedure to re-apply voltage
≦1year	Apply rated voltage (1) of inverter in the normal way
Between 1-2 years	Apply rated voltage of inverter to the product for one hour before using the inverter
≧2 years	Use a variable AC power supply to 1. Connecting 25% of inverter rated voltage for 30 minutes. 2. Connecting 50% of inverter rated voltage for 30 minutes. 3. Connecting 75% of inverter rated voltage for 30 minutes. 4. Connecting 100% of inverter rated voltage for 210 minutes. Once the procedures completed, inverter just can be used normally.

(1) Please refer the rated voltage according to model label of inverter.

3.3 Wiring Guidelines

3.3.1 Main considerations

1 Tightening Torque for Screw terminals：Refer to the tables 3-1, when using a screwdriver or any other suitable tools to make connections.

2 Power terminals:
Single phase : L1 (L), L3 (N)
Three-phase 200V models: L1 (L), L2, L3 (N)
400V models: L1, L2, L3

3 For all cabling use copper wires and the cable size shall be according to the table below rated at 40 degrees Celsius.

4 Power & Control cable Minimum rated voltage
240V AC system, 300V AC.
480V AC system, 600V AC.

5 Control cables should be separated from the power cables. Do not place them in the same cable tray or cable trunking to prevent against electrical interference.

Table 3-1

Size	TM1					TM1/TM2				
	Cable Size		Tightening torque			Cable Size		Tightening torque		
	AWG	mm²	kgf.cm	lbf.in	Nm	AWG	mm²	kgf.cm	lbf.in	Nm
Size 1	22~10	0.34~6	14	12.15	1.37	24~12	0.5~2.5	4.08	3.54	0.4
Size 2			12.24	10.62	1.2					
Size 3	18~8	0.82~8.4	18	15.58	1.76	24~12	0.5~2.5	5.1	4.43	0.5
Size 4	14~6	2~13.3	24.48	21.24	2.4					

6 The maximum RMS symmetrical Current Ratings and voltage are listed as below:

Device Rating		Short circuit Rating	Maximum Voltage
voltage	HP		
220V	0.2~10	5000A	240V
440V	1~15	5000A	480V

7 Electrical ratings of terminals:

Power (kW)	Horsepower	Supply voltage Specification	Voltage (Volt)	Current(A)
0.4 / 0.75	0.5 / 1	220~240V	300	30
1.5 / 2.2	2 / 3	220~240V		30
0.75 / 1.5 / 2.2	1 / 2 / 3	380~480V	600	28
3.7	5	220~240V	300	45
5.5 / 7.5	7.5 / 10	220~240V	300	65
3.7 / 5.5	5 / 7.5	380~480V	600	45
7.5 / 11	10 / 15	380~480V	600	65

3.3.2 Power Cables

Supply power cable must be connected to TM1 terminal block, terminals L1(L) and L3(N) for single phase 200V supply, L1(L), L2, L3(N) for three phase 200V supply and L1, L2, L3 for three phase 400V supply.
Motor cable must be connected to TM1 terminals. T1, T2, T3.

Warning: Connection of Supply line cable to terminals T1,T2& T3 will result in serious damage to the drive components.

Example power connections: Inverter with dedicated power line.

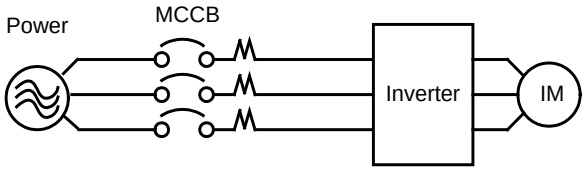

- Install a Supply RFI filter or Isolation transformer when the power source is shared with other high power electrical equipment as shown below.

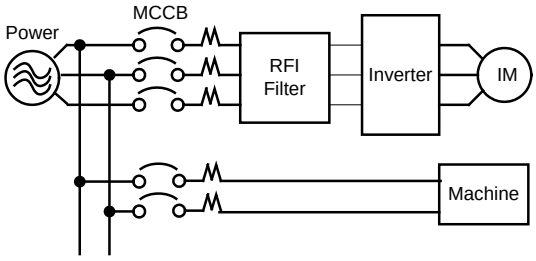

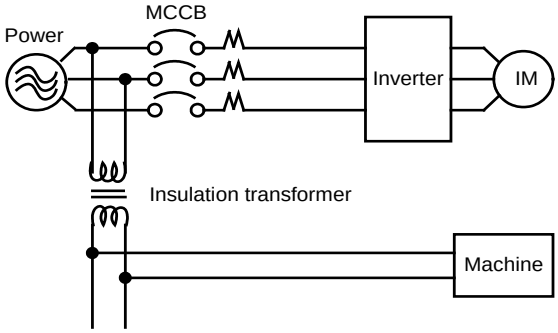

3.3.3 Control Cable selection and Wiring

Control cables should be connected to terminal block TM2.
Choose power & Control cables according to the following criteria:

- Use copper wires with correct diameter and temperature rating of 60/75°C.
- Minimum cable voltage rating for 200V type inverters should be 300VAC.
- Route all cables away from other high voltage or high current power lines to reduce interference effects.

Use a twisted pair shielded cable and connect the shield (screen) wire to the ground terminal at the inverter end only. Cable length should not exceed 50 meters.

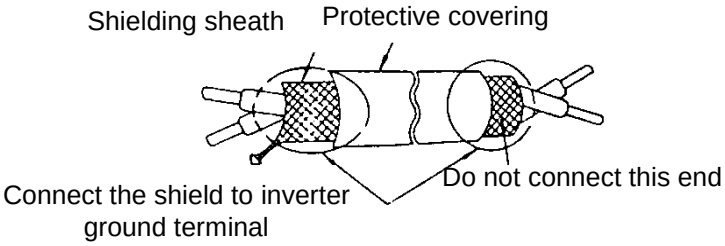

3.3.4 Wiring and EMC guidelines

For effective interference suppression, do not route power and control cables in the same conduit or trunking.
To prevent radiated noise, motor cable should be put in a metal conduit. Alternatively an armored or shielded type motor cable should be used.
For effective suppression of noise emissions the cable armor or shield must be grounded at both ends to the motor and the inverter ground. These connections should be as short as possible.
Motor cable and signal lines of other control equipment should be at the least 30 cm apart.

BDI50-…-F series with built-in EMC filter
All **BDI50-…-F** inverters are equipped with an internal EMC filter able to comply the performance levels required by EN 61800-3:2012 standard (category **C2**) with a maximum of 10 meters of shielded motor cable.

Typical Wiring

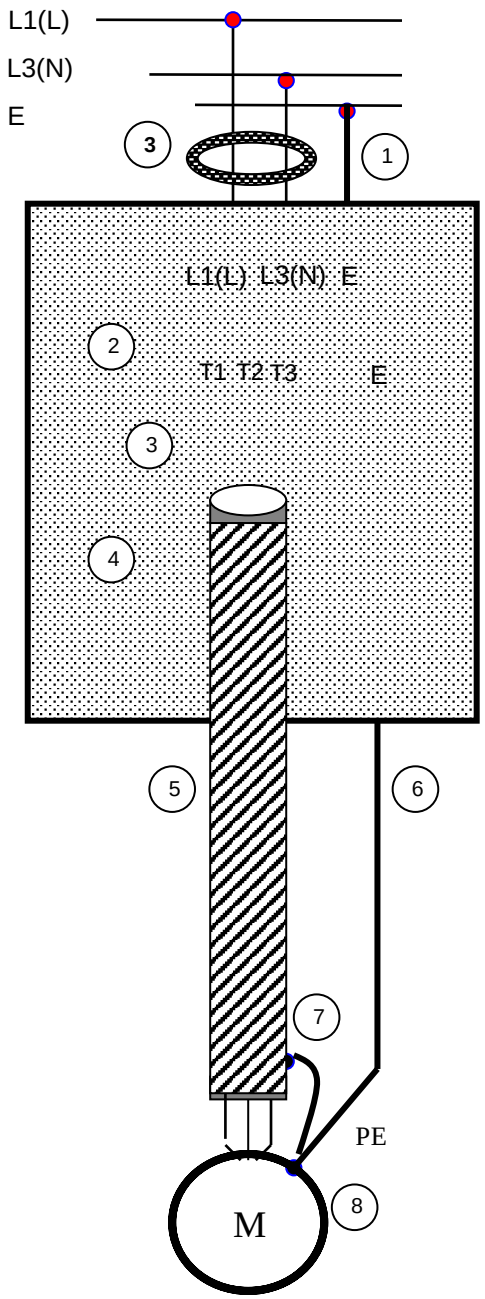

1.Protective Earth Conductor.
Conductor size for enclosure & Backplate must comply with the local electrical standards. Min 10mm².

2.Backplate. Galvanised steel (Unpainted).

3.Input / output Ferrite core and reactor.
Ferrite cores can be used to reduce radiated noise due to long motor cables.
If ferrite core is used loop wires round the core (see table 3-2). Install core as close to the inverter as possible
Output reactors provide additional benefit of reducing dv/dt for protection of motor windings.

4. Metal Cable clamp. no more than 150mm from the inverter.

Note: If no enclosure & backplate is used then connect the cable shield by a good 360 º termination to the Inverter output terminal E.

5.Screened (Shielded four core cable).

6.Separate Protective Earth wire, routed outside motor cable separated be at least 100mm.
Note:- this is the preferred method specially for large output cables and long length. Multi-core screened (3 core & protective earth) can be used for small power and short length.

7.Connect the cable shield by a good 360º termination and connect to the motor protective earth terminal.
This link must be as short as possible.

8.Motor Earth terminal(Protective Earth).

3.3.5 Failure liability

- Gefran bears no responsibility for any failures or damaged caused to the inverter if the recommendations in this instruction manual have not been followed specifically points listed below.

- If a correctly rated fuse or circuit breaker has not been installed between the power source and the inverter.

- If a magnetic contactor, a phase capacitor, burst absorber and LC or RC circuits have been connected between the inverter and the motor.

- If an incorrectly rated three-phase squirrel cage induction motor has been used.

Note:

When one inverter is driving several motors, the total current of all motors running simultaneously must be less than the rated current of the inverter, and each motor has to be equipped with a correctly rated thermal overload relay.

3.3.6 Considerations for peripheral equipment

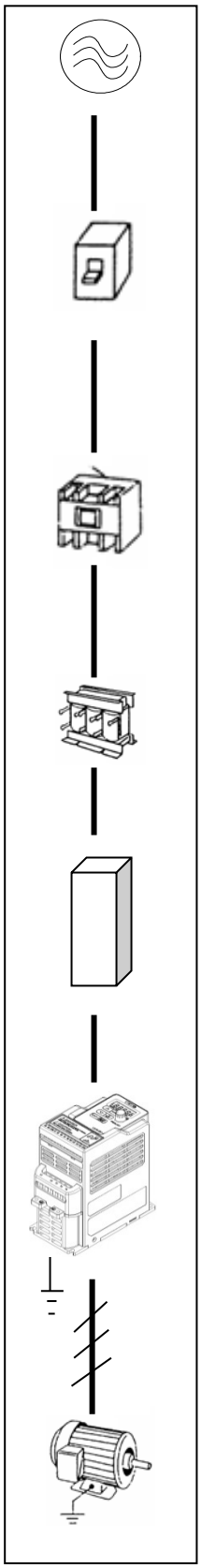

Power	Ensure that the supply voltage is correct. A molded-case circuit breaker or fused disconnect must be installed between the AC source and the inverter
Circuit Breaker & RCD	Use a molded-case circuit breaker that conforms to the rated voltage and current of the inverter. Do not use the circuit breaker as the run/stop switch for the inverter. Residual Current Circuit Breaker(RCD) Current setting should be 200mA or above and the operating time at 0.1 second or longer to prevent malfunctions.
Magnetic contactor	Normally a magnetic contactor is not needed. A contactor can be used to perform functions such as external control and auto restart after power failure. Do not use the magnetic contactor as the run/stop switch for the inverter.
AC reactor for power quality improvement	When a 200V/400V inverter with rating below 11 kW is connected to a high capacity power source (600kVA or above) then an AC reactor can be connected for power factor improvement and reducing harmonics.
Input noise filter	BDI50 inverter has a built-in filter first Environment. (Category C2 or C3, see paragraph 3.3.4). To satisfy the required EMC regulations for your specific application you may require an additional EMC filter.
Inverter	Connect the single phase power to Terminals, L1(L) & L3(N) and three phase power to Terminals : (200V : L1(L),L2,L3(N) or 400V : L1,L2,L3) Warning! Connecting the input terminals T1, T2, and T3 to AC input power will damage the inverter. Output terminals T1, T2, and T3 are connected to U, V, and W terminals of the motor. To reverse the motor rotation direction just swap any two wires at terminals T1, T2, and T3. Ground the Inverter and motor correctly. Ground Resistance for 200V power<100 Ohms.
Motor	Three-phase induction motor. Voltage drop on motor due to long cable can be calculated. Volts drop should be < 10%. Phase-to-phase voltage drop (V) = $\sqrt{3}$ ×resistance of wire (Ω/km)×length of line (m)×current×10^{-3} Note: when motor cables are longer than 100m, it is recommend to use external output choke.

(For detailed information for the above peripheral equipment refer to Chapter 6).

3.3.7. Ground connection

Inverter Ground terminal must be connected to installation ground correctly and according to the required local wiring regulations.

- Ground cable size must be according to the required local wiring regulations. Ground connection should be as short as possible.
- Do not share the ground of the inverter with other high current loads (Welding machine, high power motors). Ground each unit separately.
- Ensure that all ground terminals and connections are secure
- Do not make ground loops when several inverters share a common ground point.

Note: Please leave at least 5cm while installing inverter side by side in order to provide enough cooling space.

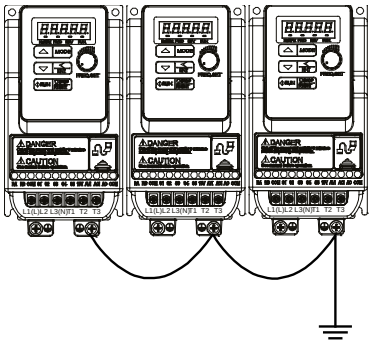

(a) Correct

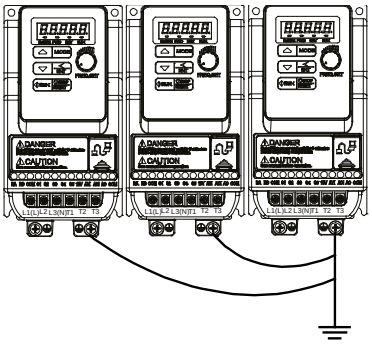

(b) Correct

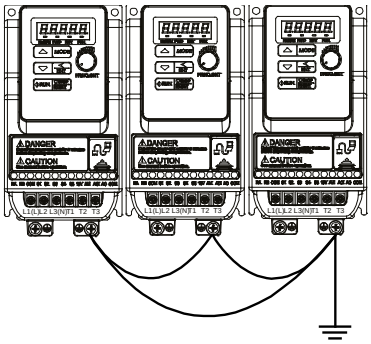

(c) Incorrect

3.4 Specifications

3.4.1 Product Specifications

230V Class : Single phase. F : Standards for built-in filter

	Sizes BDI50		1004	1007	2015	2022
Output Rating	Rated Output Capacity	kVA	1.0	1.65	2.9	4.0
	Rated Output Current	A	2.6	4.3	7.5	10.5
	Maximum Applicable Motor	HP	0.5	1	2	3
		kW	0.4	0.75	1.5	2.2
	Output Voltage	V	Three-Phase, 0 to 240V			
	Output Frequency	Hz	Based on parameter setting 0.01~599			
Input Rating	Rated Voltage, Frequency		Single-Phase, 200V to 240V, 50/60Hz			
	Allowable Voltage Fluctuation		+10% ~ -15%			
	Allowable Frequency Fluctuation		±5%			
	Input current (1)	A	7.2	11	15.5	21
Allowable momentary power loss time		s	1.0	1.0	2.0	2.0
Enclosure			IP20			

230V Class : Three phase

	Sizes BDI50		1007	2015	2022	3037	4055	4075
Output Rating	Rated Output Capacity	kVA	1.65	2.90	4.00	6.67	9.91	13.34
	Rated Output Current	A	4.3	7.5	10.5	17.5	26	35
	Maximum Applicable Motor	HP	1	2	3	5	7.5	10
		kW	0.75	1.5	2.2	3.7	5.5	7.5
	Output Voltage	V	Three-Phase, 0 to 240V					
	Output Frequency	Hz	Based on parameter setting 0.01~599					
Input Rating	Rated Voltage, Frequency		Three-Phase, 200V to 240V, 50/60Hz					
	Allowable Voltage Fluctuation		+10% ~ -15%					
	Allowable Frequency Fluctuation		±5%					
	Input current (1)	A	6.4	9.4	12.2	19.3	28.6	38.5
Allowable momentary power loss time		s	1.0	2.0	2.0	2.0	2.0	2.0
Enclosure			IP20					

(1) The input current is calculated value at full rated output current.

400V Class : Three phase. F : Standards for built-in filter

	Sizes BDI50		2007	2015	2022	3037	3055	4075	4110
Output Rating	Rated Output Capacity	kVA	1.7	2.9	4.0	7.01	9.91	13.34	18.29
	Rated Output Current	A	2.3	3.8	5.2	9.2	13.0	17.5	24
	Maximum Applicable Motor	HP	1	2	3	5	7.5	10	15
		kW	0.75	1.5	2.2	3.7	5.5	7.5	11
	Output Voltage	V	Three-Phase, 0 to 480V						
	Output Frequency	Hz	Based on parameter setting 0.01~599						
Input Rating	Rated Voltage, Frequency		Three-Phase, 380V to 480V, 50/60Hz						
	Allowable Voltage Fluctuation		+10% ~ -15%						
	Allowable Frequency Fluctuation		±5%						
	Input current (1)	A	4.2	5.6	7.3	10.1	14.3	19.3	26.4
Allowable momentary power loss time		s	2.0	2.0	2.0	2.0	2.0	2.0	2.0
Enclosure			IP20						

(1) The input current is calculated value at full rated output current.

BDI50 Powerloss

All inverters are equipped with internal fans (excluding BDI50 size 1):

Drive Model	Power Loss (W)	Heat Loss (kcal/hr)
230 V Class : single phase and three phase		
BDI50-1004-...-2M/2T-…	27.0	23.2
BDI50-1007-...-2M/2T-…	45.0	38.7
BDI50-2015-...-2M/2T-…	64.0	55.0
BDI50-2022-...-2M/2T-…	70.0	60.2
BDI50-3037-...-2T-…	155.0	133.3
BDI50-4055-...-2T-…	148.0	127.3
BDI50-4075-...-2T-…	330.0	283.8
400 V Class: three phase		
BDI50-2007-...-4-…	30.0	25.8
BDI50-2015-...-4-…	37.0	31.8
BDI50-2022-...-4-…	61.0	52.5
BDI50-3037-...-4-…	98.3	84.5
BDI50-3055-...-4-…	157.0	135.0
BDI50-4075-...-4-…	234.0	201.2
BDI50-4110-...-4-…	297.0	255.4

3.4.2 General Specifications

Control Mode		V/f Control, Sensorless control (SLV)
Overload		150% * rated current (1' every 10').
Frequency	Output freq. Range	0.01~599.00Hz
	Speed accuracy (100% torque)	3% (V/f) 1% (SLV)
	Starting torque	3Hz / 100% (V/f) 3Hz / 150% (SLV)
	Setting	Keypad : Set directly with ▼▲ keys or the VR (Potentiometer integrated)
		External signal: • AVI (0~10V / 2~10V), ACI (0~20mA, 4~20mA) input • multifunction digital inputs • by communication
	Frequency limit	Lower and upper frequency limits 3 -skip frequency settings.
Run & Stop	Method	• Keypad • Multifunction terminals (2/3 wire selection) • Jog function • By communication
Main Controls	V / f curve setting	6 fixed and one customized
	Carrier frequency	1~16kHz (default 5kHz)
	Acceleration and deceleration control	2 sets Acc / dec time parameters 4 points S curve parameters
	Multifunction digital input	5, 19 functions Sizes 1/2: NPN&PNP by separate models Sizes 3/4: NPN&PNP selection from terminals
	Multifunction digital output	1 relay, 16 functions
	Multifunction analog input	2, AVI: 0~10V/2~10V, ACI: 0~20mA/4~20mA
	Multifunction analog output	(0~10V), 5 functions
	Main features	Autotune, Torque compensation, Slip compensation, 8 preset speeds, Auto-run, PID control, torque boost, V/f starting Frequency, Fault reset, Powerloss ride through, DC-brake, Mechanical brake control, AVR function, Fan control
Display	Info available	Parameter, parameter value, frequency, line speed, DC voltage, output voltage, output current, PID feedback, input and output terminal status, Heat sink temperature, Program Version, Fault Log
	LED Status Indicator	For run/stop/forward and reverse.
Protective Functions	Overload Protection	Integrated motor and Inverter overload protection.
	Motor over-temperature	By PTC (AVI)
	Overvoltage	200V Class : > 410V, 400V Class: > 820V
	Undervoltage	200V Class: < 190V, 400V Class: < 380V
	Auto-Restart	Inverter auto-restart after a momentary power loss.
	Stall Prevention	Stall prevention for Acceleration/ Deceleration/ and continuous Run.

	Additional protective functions	Heatsink over temperature protection, Auto carrier frequency reduction with temperature rise, Protection of reverse operation, Auto restart attempts setting, Parameter lock
Environment Specification	Protection degree	IP20
	Operating temperature	-10~ +40°C (size 1), -10~+50°C (all other sizes)
	Storage temperature	-20~60℃
	Humidity	Under 95%RH (no condensation)
	Altitude	1000 meters or lower
	Vibration	Under 20Hz, 1G(9.8m/s²); 20～50Hz 0.6G(5.88m/s²)
Communication Function		Built in: RS-485 with Modbus RTU / ASCII (standard RJ45 connection), BACnet Optionals: Profibus, DeviceNet, CANopen, TCP/IP
Braking unit		Built-in on 3ph 400V Class and 3ph 200V Class from 3.7kW to 7.5kW
EMC filter		Built-in on –F version 1ph 200V Class and 3ph 400V Class
Certification	**CE**	In compliance with EN61800-3 (CE & RE) and EN61800-5-1 (LVD) Note: Inverter can get the better grounding effect with grounding kit.
	RoHS	Conformity to RoHS directive
	cULus	UL508C

3.5 Standard wiring

3.5.1 Single phase (NPN input)

200V: BDI50-1004-...-2M-N ... BDI50-2022-...-2M-N

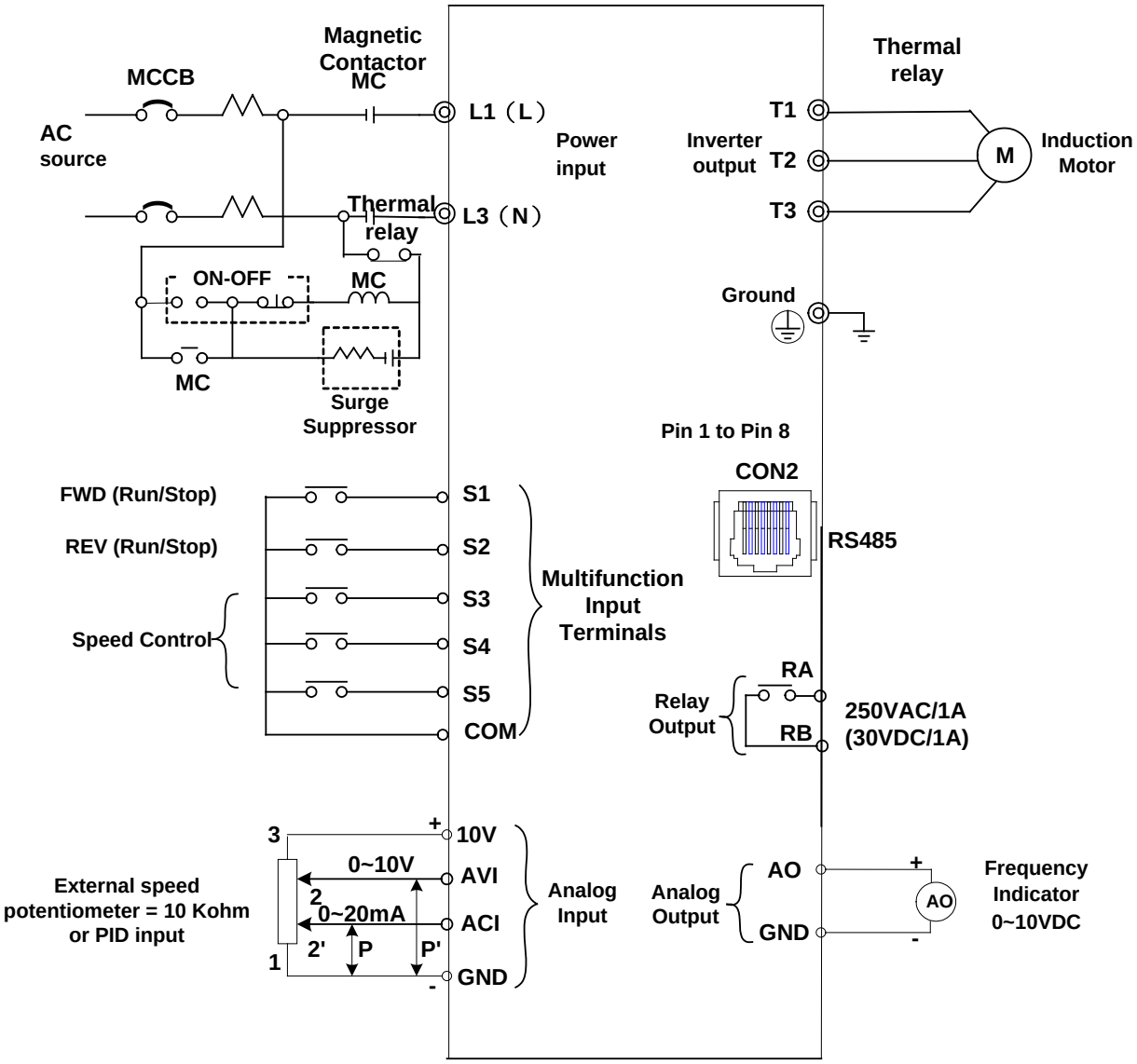

3.5.2 Single phase (PNP input)

200V: BDI50-1004--...-2M-P ... BDI50-2022-...-2M-P

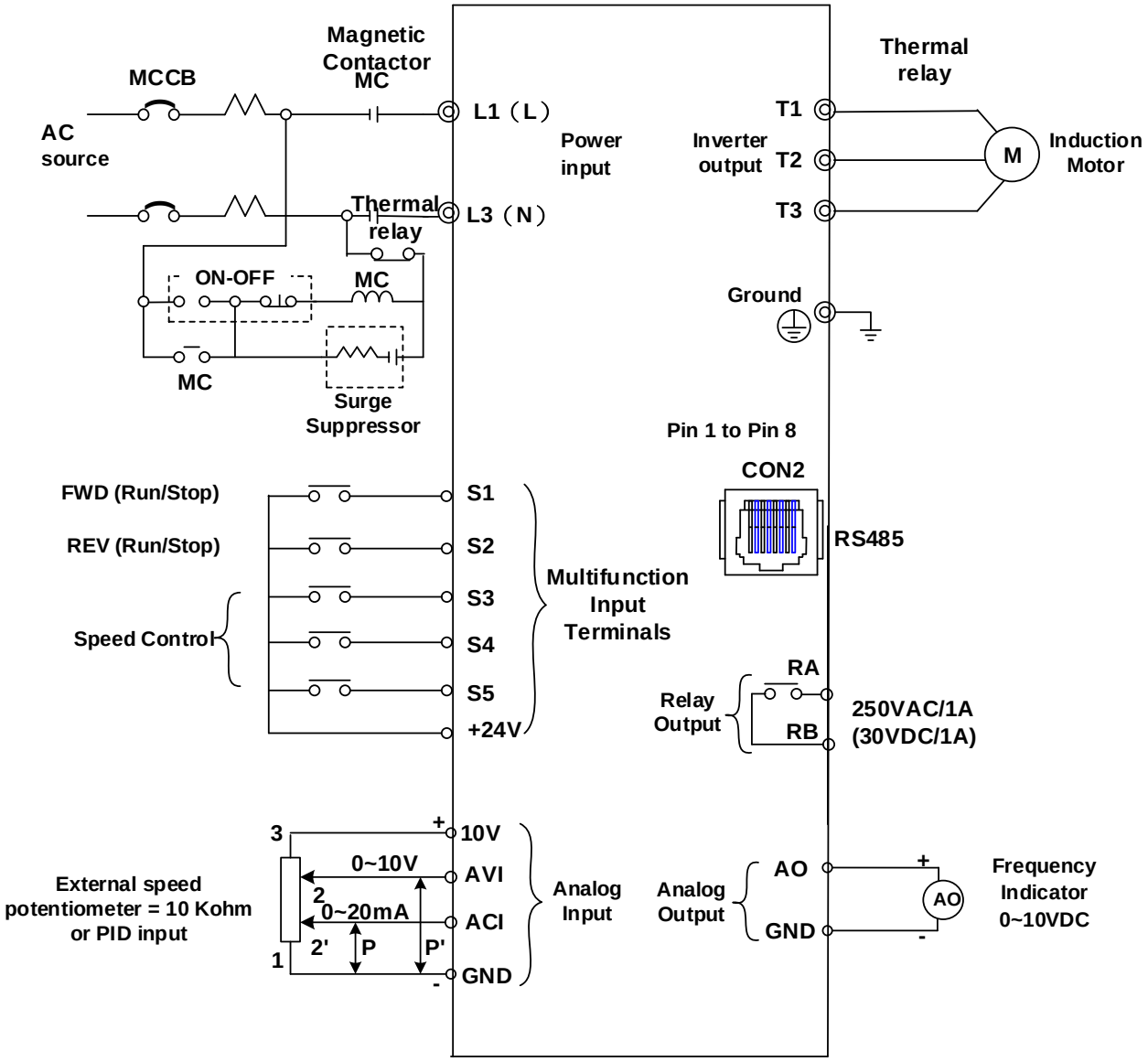

3.5.3 Three phase (NPN input)

230V: BDI50-1007-...-2T-N ... BDI50-2022-...-2T-N

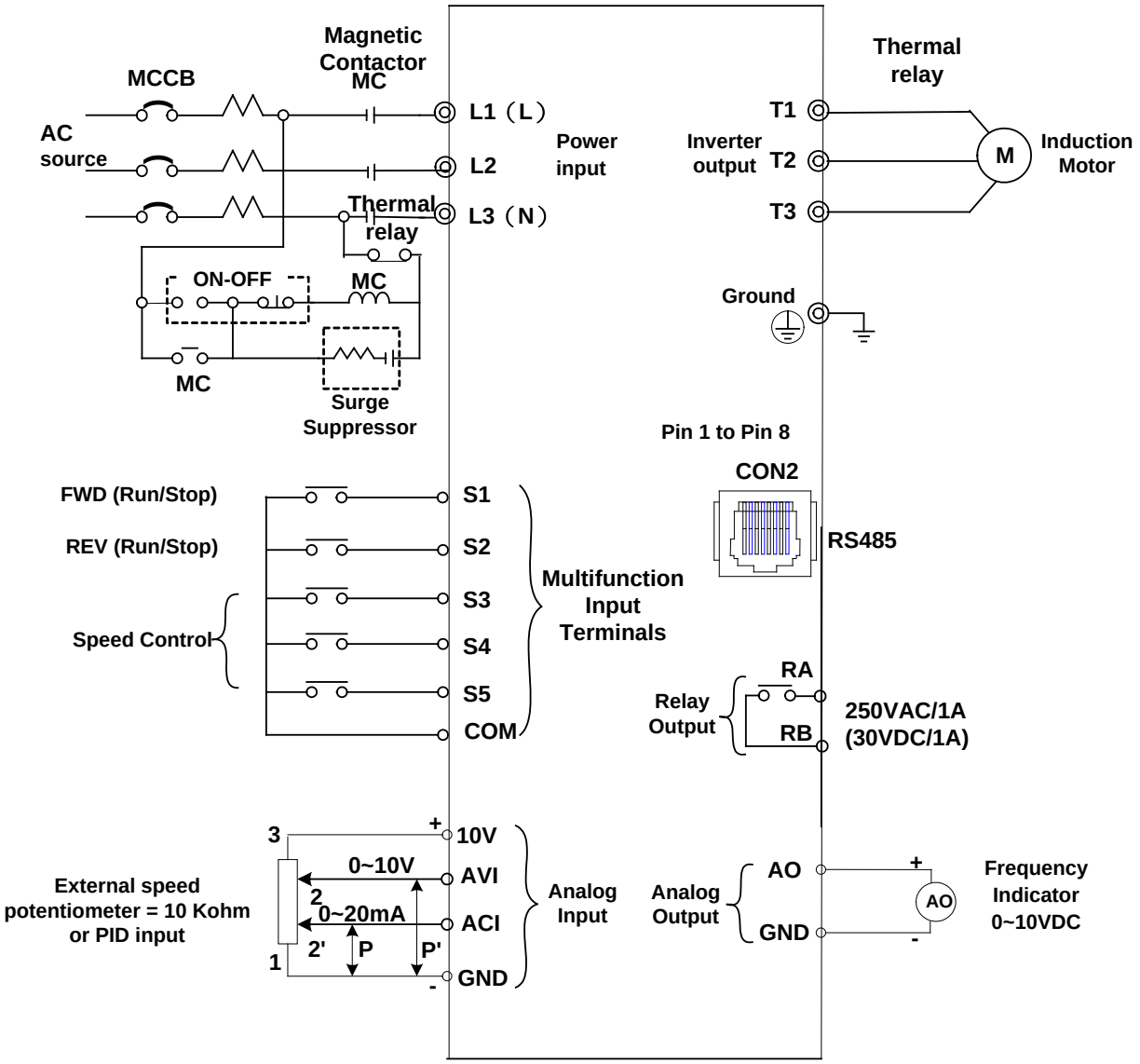

400V: BDI50-2007-...-4-N ... BDI50-2022-...-4-N

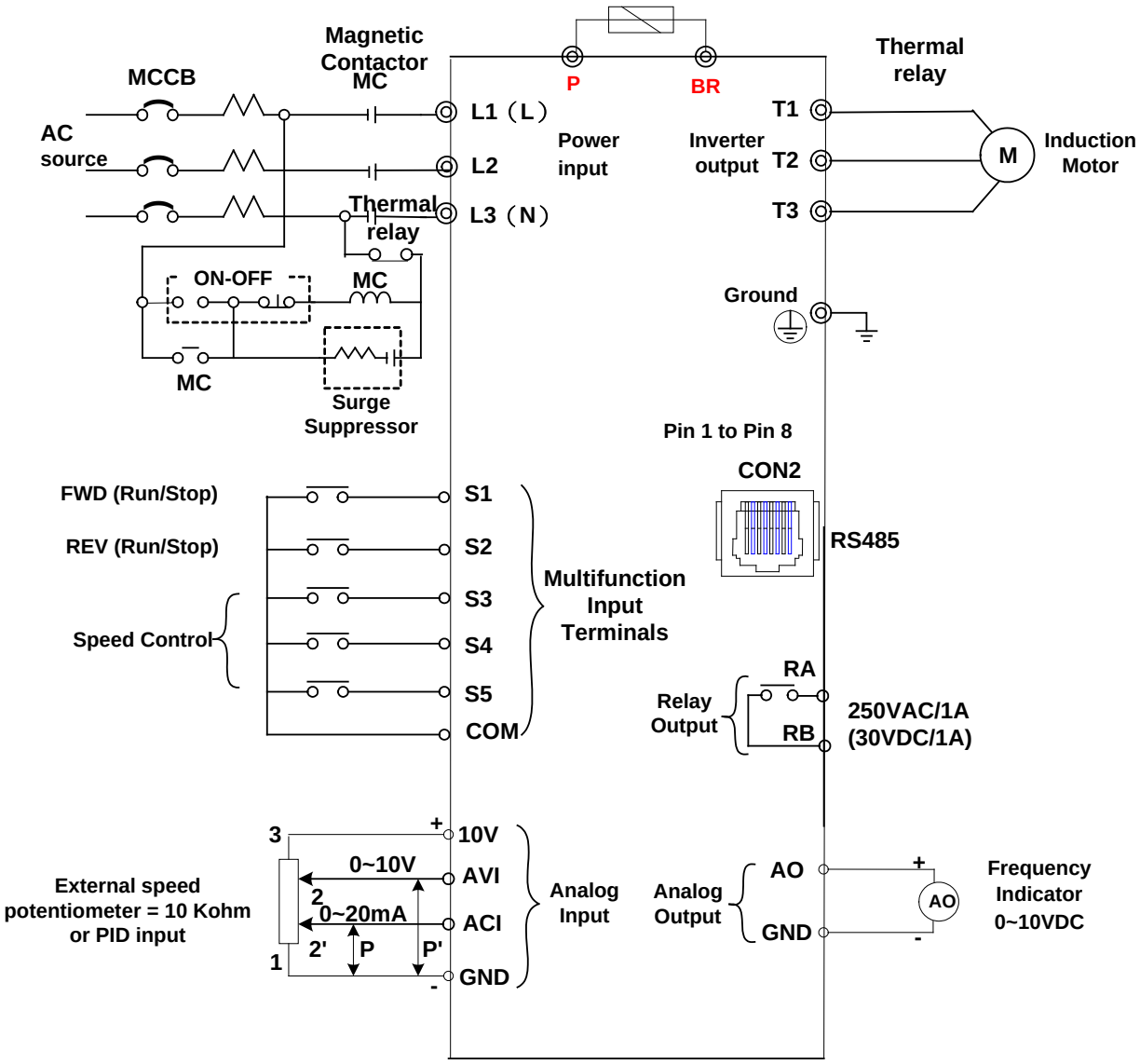

3.5.4 Three phase (PNP input)

400V: BDI50-2007-...-4-P-F ...BDI50-2022-...-4-P-F

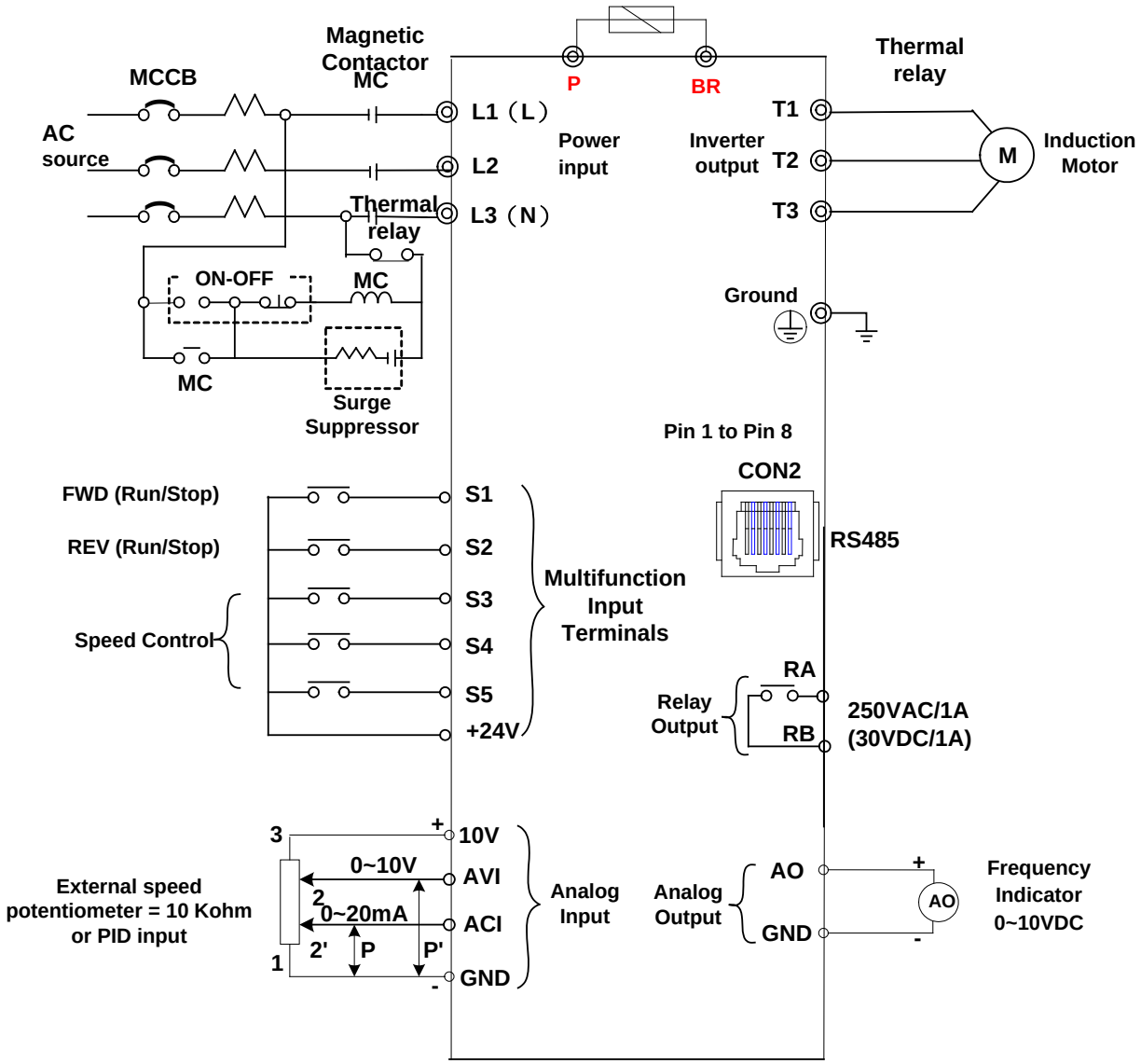

3.5.5 Three phase (NPN / PNP Selectable models)

400V: BDI50-3037-...-4-NP ... BDI50-4110-...-4-NP
230V: BDI50-3037-...-2T-NP ... BDI50-4075-...-2T-NP

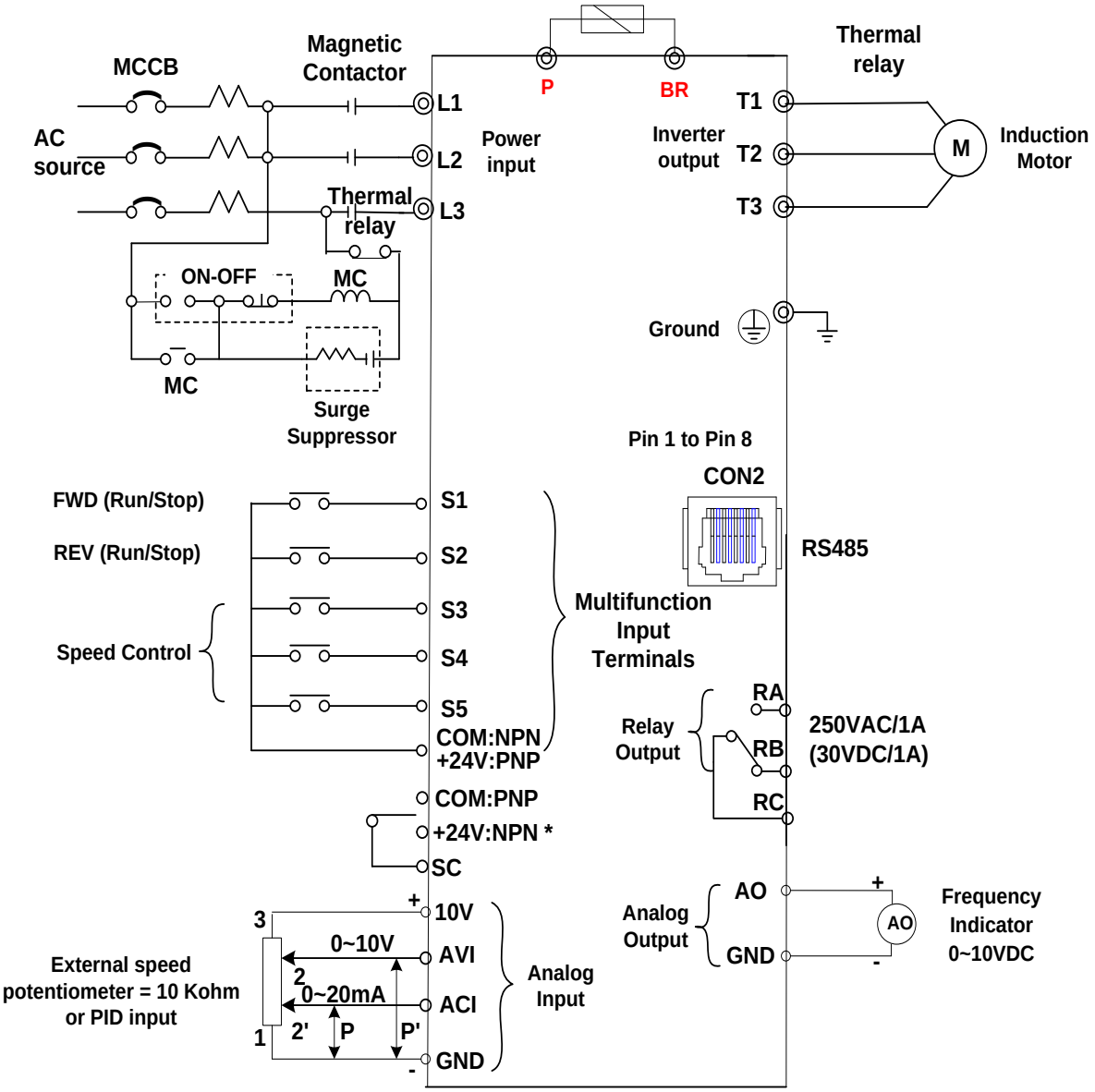

NPN/PNP input type selection

PNP: 1.Link SC and COM terminal
2.Use +24v terminal for S1~S5 common point

NPN: 1.Link SC and +24V terminal
2.Use COM terminal for S1~S5 common point

Please ensure correct connection before setting parameter group 3 digital inputs.

3.6 Terminal Description

3.6.1 Description of main circuit terminals

Terminal symbols	TM1 Function Description
L1(L)	Main power input, single phase：**L1(L) / L3(N)**
L2	three phase(200V)：**L1(L) / L2 / L3(N)**
L3(N)	three phase (400V)：**L1 / L2 / L3**
P*	externally connected braking resistor
BR*	
T1	Inverter output, connect to U, V, W terminals of motor
T2	
T3	
⏚	Ground terminal

***P, BR for BDI50-…-KBX-2T / BDI50-…-KBX-4**

Single phase

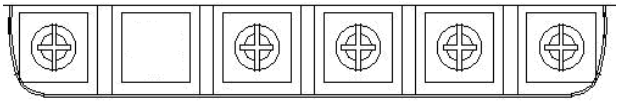

Note: the screw on L2 terminal is removed for the single phase input supply models.

Three phase (BDI50-…-KXX-2T, 200V series)

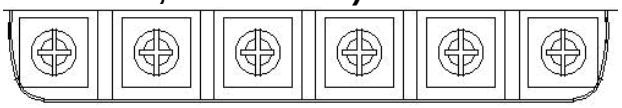

Three phase (BDI50-…-KBX-2T & BDI50-…-KBX-4 series)

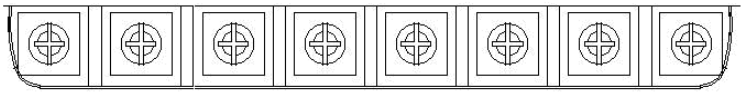

3.6.2 Description of control circuit terminal

Size 1 & Size 2

Terminal symbols	TM2 Function Description	Signal Level
RA	Relay output terminal	250VAC/1A (30VDC/1A)
RB		
COM	S1~S5 (COMMON) 【NPN】	±15%,Max output current 30mA
24V	S1~S5 (COMMON) 【PNP】	
S1~S5	Multi-function input terminals (refer to group 3)	24 VDC, 4.5 mA, Optical coupling isolation (Max,voltage 30 Vdc, Input impedance 6kΩ)
10V	Built in Power for an external speed potentiometer	10V (Max current:20mA)
AVI	Analog voltage input Specification : 0 / 2~10 VDC (choose by parameter 04-00)	0~10V (Input impedance 200kΩ)
ACI	Analog current input Specification : 0 / 4~20mA (choose by parameter 04-00)	0~20mA (Input impedance 499Ω)
AO	Multi function analog output terminal. Maximum output 10VDC/1mA	0~10V (Max current 2mA)
AGND	Analog ground terminal	

NPN:

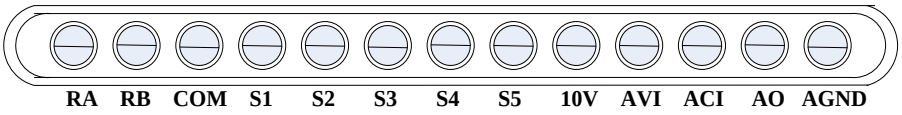

PNP:

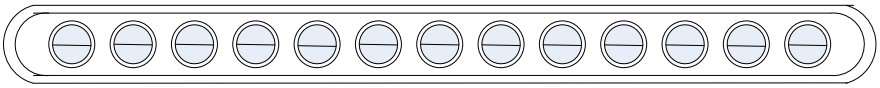

Size 3 & Size 4

Terminal symbols	TM1 Function Description
RA	Relay output terminal, Specification: 250VAC/5A(30VDC/5A) RA: Normally open RB: Normally close RC: common point
RB	
RC	

Terminal symbols	TM2 Function Description	Signal Level
+24V	Common point of PNP input	±15%,Max output current 30mA
SC	NPN/PNP selectable terminal. NPN input: +24V&SC need to be shorted. PNP input: COM&SC need to be shorted.	
COM	voltage reference point for S1~S5	
S1~S5	Multi-function input terminals (refer to group3)	24 VDC, 4.5 mA, Optical coupling isolation (Max,voltage30 Vdc, Input impedance 6kΩ)
10V	Built in Power for an external speed potentiometer (Max output : 20mA)	10V,(Max current:20mA)
AVI/PTC	Analog voltage input/motor over temperature protection signal input. Specification: 0 / 2~10 VDC (choose by parameter 04-00)	0~10V(Input impedance 200kΩ)
ACI	Analog current input. Specification: 0 / 4~20mA (choose by parameter 04-00)	0~20mA(Input impedance 499Ω)
AO	Multi function analog output terminal. Maximum output 10VDC/1mA	0~10V(Max current 2mA)
AGND	Analog ground terminal	

NPN/PNP:

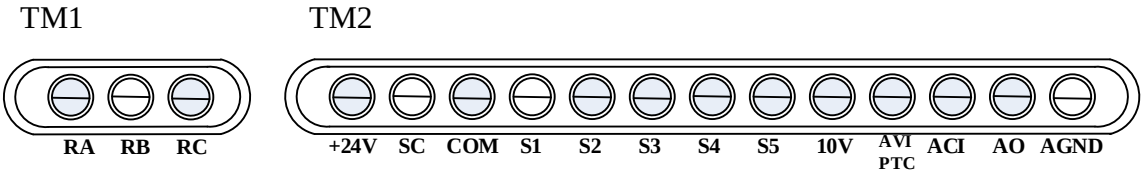

3.7 Dimensions and weight

Size 1

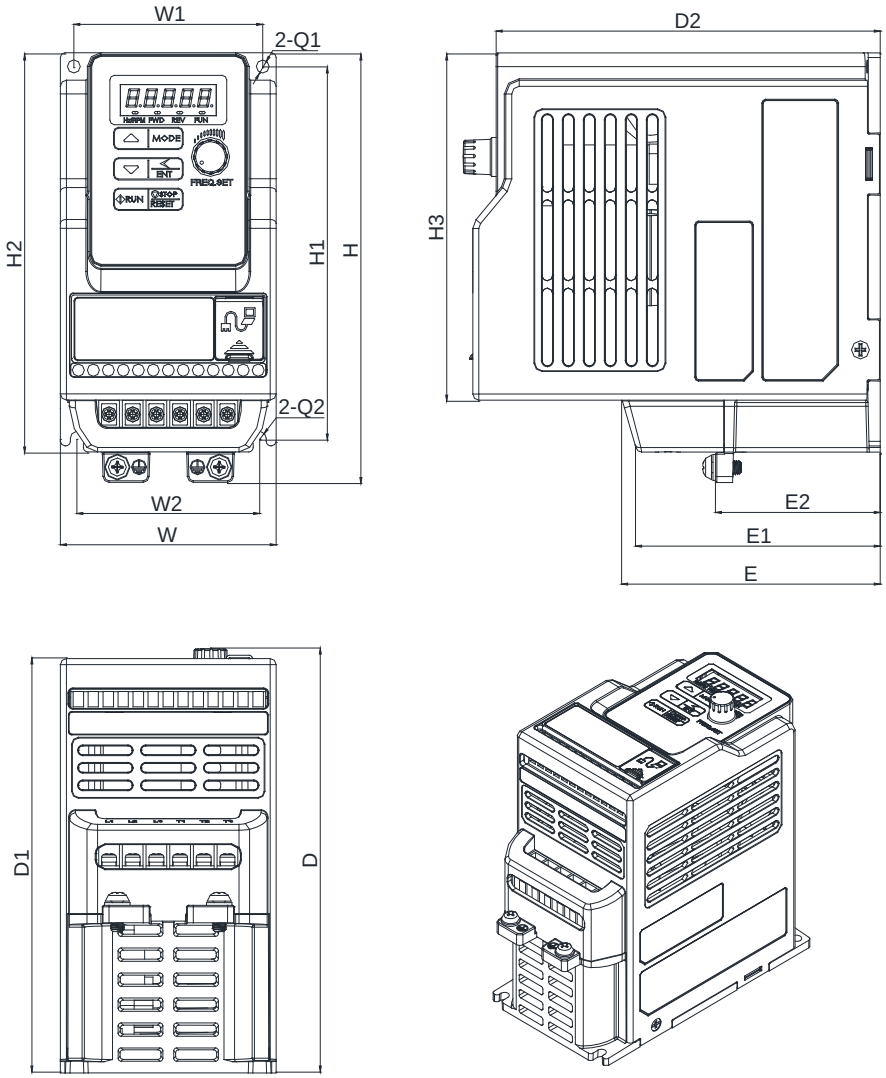

Model	Dimension (mm)															Weight (kg)
	W	W1	W2	H	H1	H2	H3	D	D1	D2	E	E1	E2	Q1	Q2	
BDI50-1004-…	72	63	61	141	131	122	114	141	136	128.2	86.3	81.1	55	4.4	2.2	0,85 (0.95*)
BDI50-1007-…																

*: With Built-in EMC filter

Size 2 200V

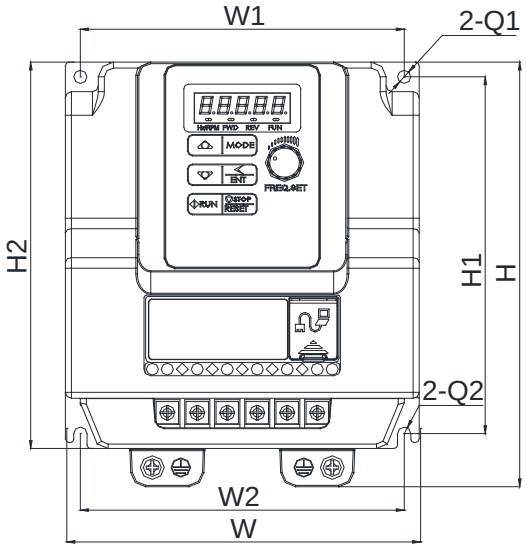

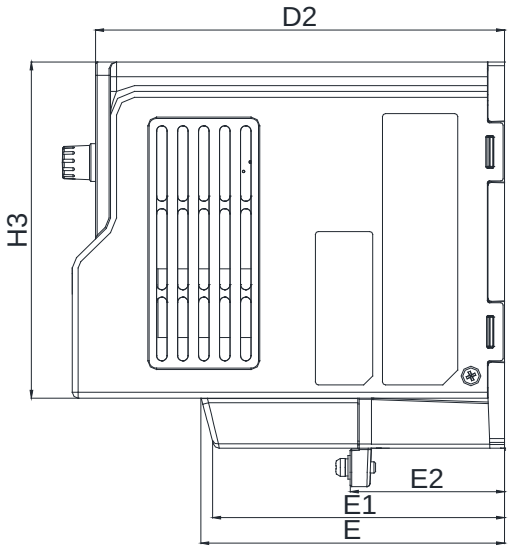

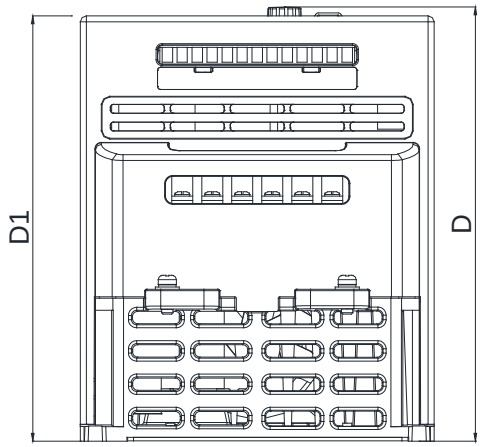

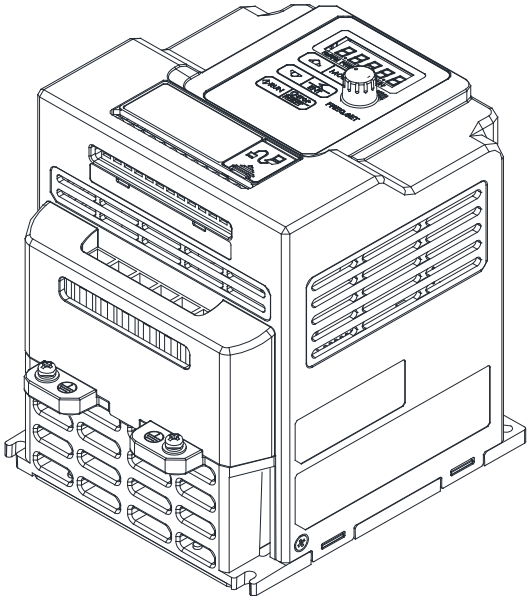

Model	Dimension (mm)															Weight (kg)
	W	**W1**	**W2**	**H**	**H1**	**H2**	**H3**	**D**	**D1**	**D2**	**E**	**E1**	**E2**	**Q1**	**Q2**	
BDI50-2015-…-2M **BDI50-2015-…-2T** **BDI50-2022-…-2M** **BDI50-2022-…-2T**	**118**	**108**	**108**	**144**	**131**	**121**	**114**	**150**	**144.2**	**136.4**	**101.32**	**96.73**	**51.5**	**4.4**	**2.2**	**1.35** **(1.45*)**

* : With Built-in EMC filter

Size 2 400V

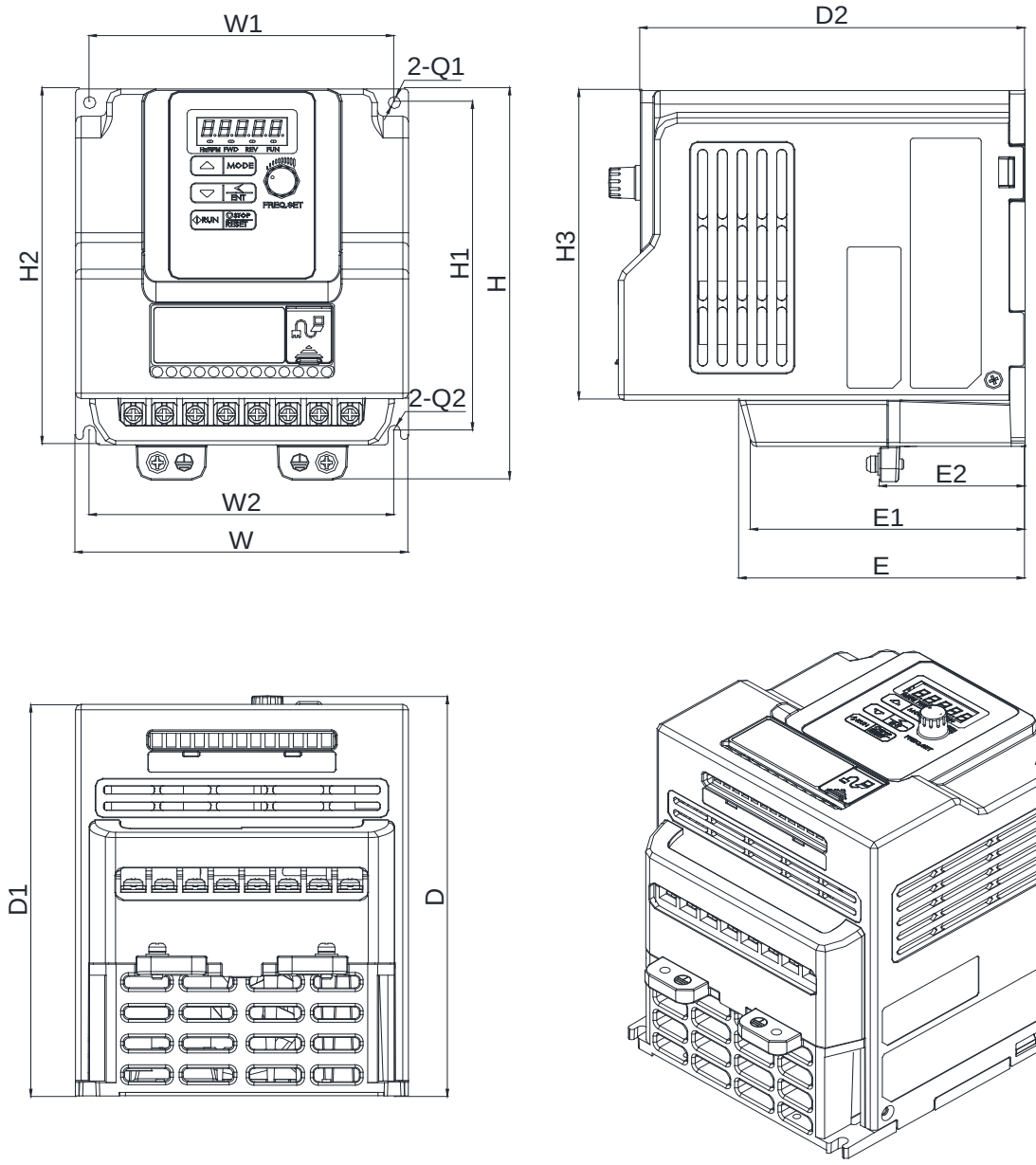

Model	Dimension (mm)															Weight (kg)
	W	W1	W2	H	H1	H2	H3	D	D1	D2	E	E1	E2	Q1	Q2	
BDI50-2007-…-4 **BDI50-2015-…-4** **BDI50-2022-…-4**	118	108	108	144	131	121	114	150	144.2	136.4	101.32	96.73	51.5	4.3	2.2	**1.35** **(1.45*)**

* : With Built-in EMC filter

Size 3

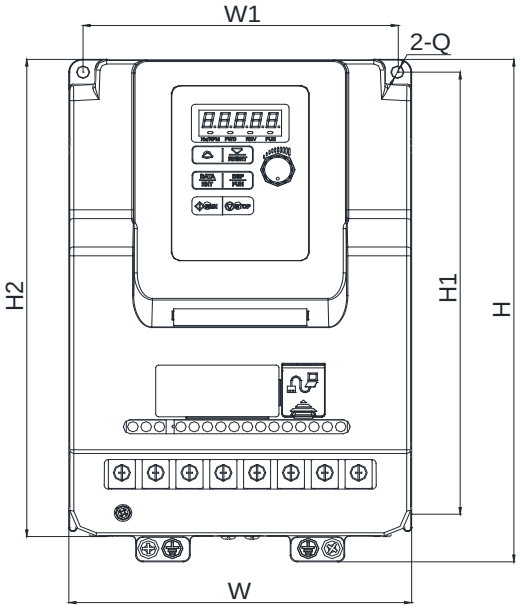

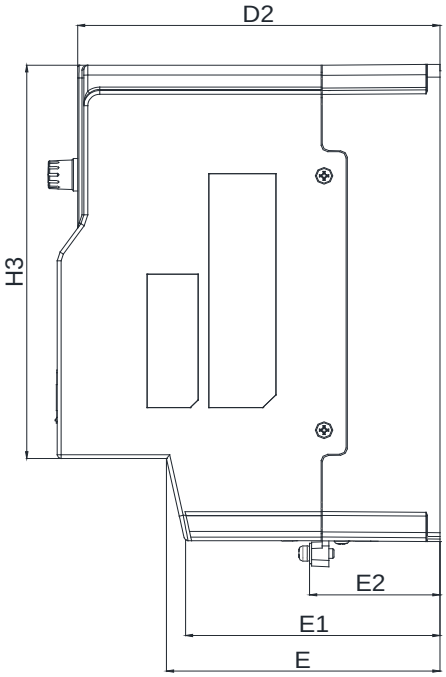

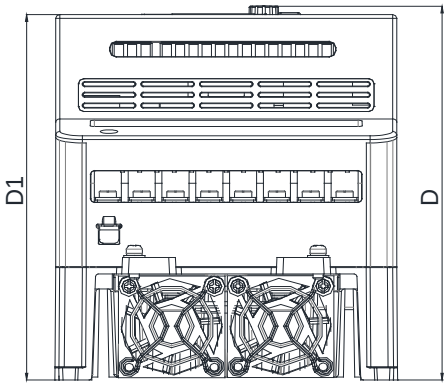

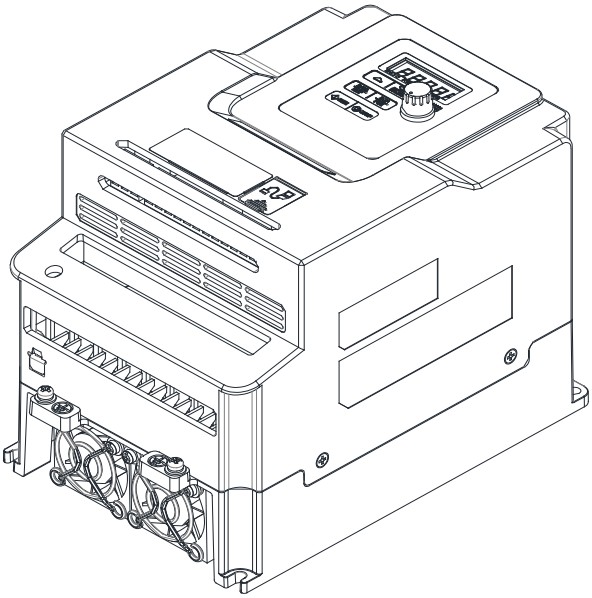

Model	Dimension (mm)													Weight (kg)
	W	W1	H	H1	H2	H3	D	D1	D2	E	E1	E2	Q	
BDI50-3037-…	129	118	197.5	177.6	188	154.7	148	143.7	136	102.6	96	48.2	4.5	2.5 (2.7*)
BDI50-3055-…														

* : With Built-in EMC filter

Size 4

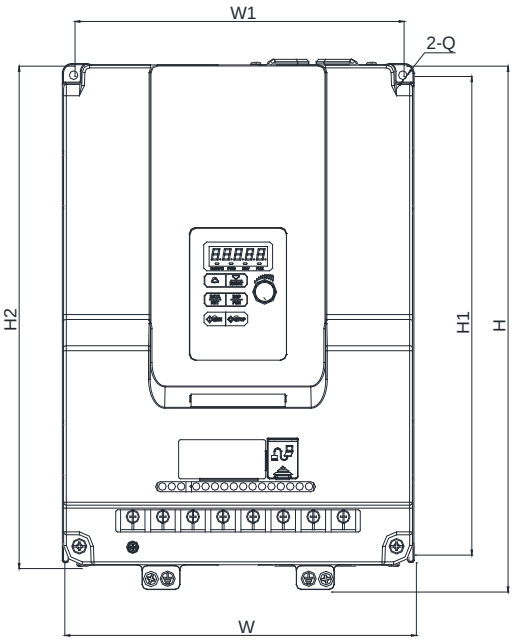

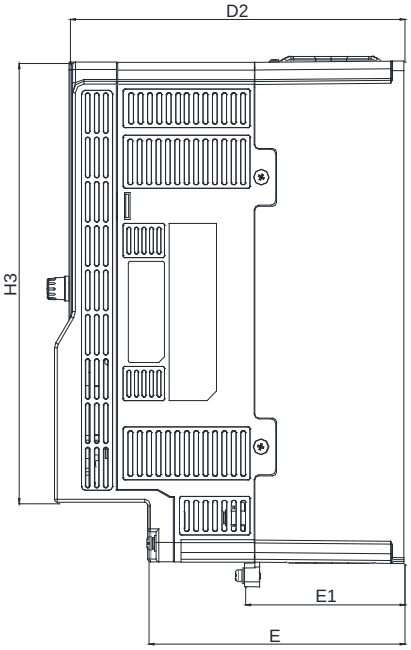

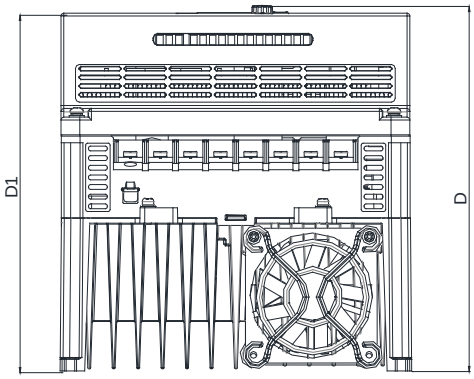

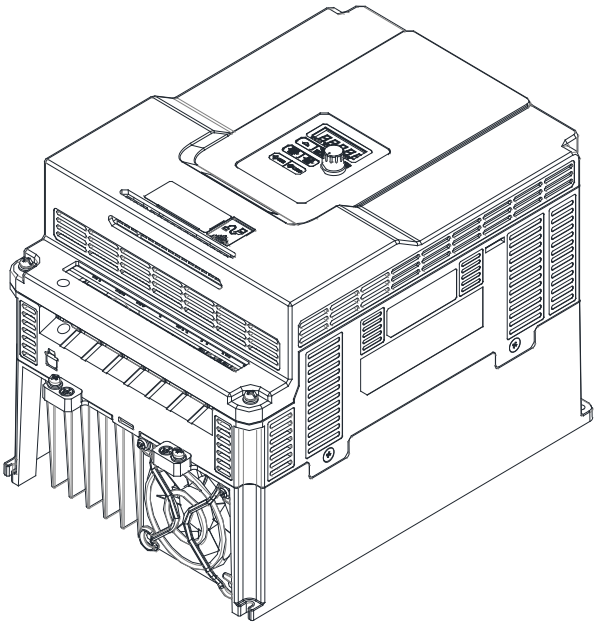

Model	Dimension (mm)												Weight (kg)
	W	W1	H	H1	H2	H3	D	D1	D2	E	E1	Q	
BDI50-4055-…	187	176	273	249.8	261	228.6	190	185.6	177.9	136	84.7	4.5	6 (6,3*)
BDI50-4075-…													
BDI50-4110-…													

* : With Built-in EMC filter

3.8 EMC Filter Disconnection

EMC filter may be disconnected:
Inverter drives with built-in EMC filter are not suitable for connection to certain type of supply systems, such as listed below; in these cases the RFI filter can be disabled.
In all such cases consult your local electrical standards requirements.

IT type supply systems (ungrounded) & certain supply systems for medical equipment.
For ungrounded supply systems, if the filter is not disconnected the supply system becomes connected to Earth through the Y capacitors on the filter circuit. This could result in danger and damage to the Drive.

Size 1 & Size 2
Disconnection steps:
1. Remove EMC filter protection cover by screwdriver.
2. Remove EMC Filter link by pliers.

Note: Disconnecting the EMC filter link will disables the filter function, please consult your local EMC standards requirement.

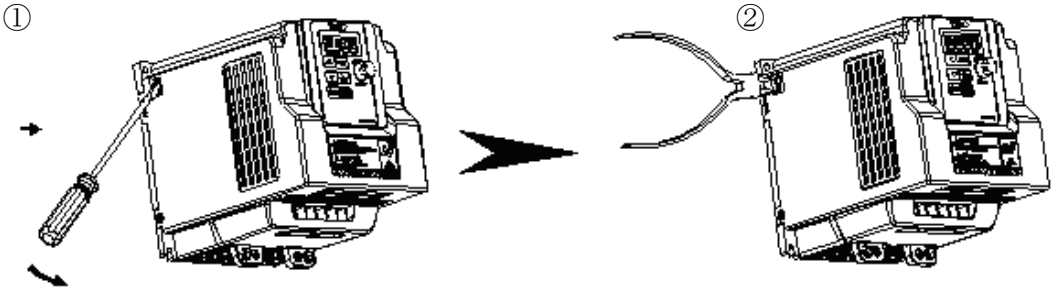

Size 3 & Size 4
Disconnection steps:
1. Loosen the screws for EMC filter by screwdriver
2. Remove EMC filter
3. Tighten the screw

Note: Disconnecting the EMC filter link will disables the filter function, please consult your local EMC standards requirement.

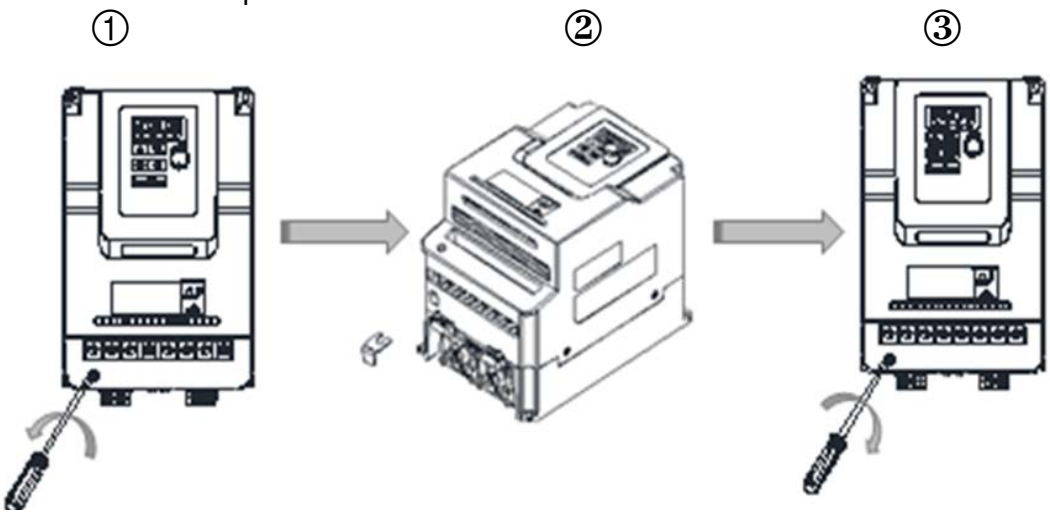

Chapter4 Software Index

4.1 Keypad Description

4.1.1 Operator Panel Functions

Type	Item	Function
Digital display & LEDs	Main digital displays	Frequency Display, Parameter, voltage, Current, Temperature, Fault messages.
	LED Status	Hz/rpm: ON when the frequency or line speed is displayed. OFF when the parameters are displayed. FWD: ON while the inverter is running forward. Flashes while stopped. REV: ON while the inverter is running reverse. Flashes while stopped. FUN: ON when the parameters are displayed. OFF when the frequency is displayed.
Variable Resistor	FREQ SET	Used to set the frequency
Keys On Keypad	RUN	RUN: Run at the set frequency.
	STOP/RESET (Dual function keys)	STOP: Decelerate or Coast to Stop. RESET: Use to Reset alarms or resettable faults.
	▲	Increment parameter number and preset values.
	▼	Decrement parameter number and preset values.
	MODE	Switch between available displays
	</ENTER (Dual function keys, a short press for left shift function, a long press for ENTER function)	“<” Left Shift: Used while changing the parameters or parameter values ENTER: Used to display the preset value of parameters and for saving the changed parameter values.

4.1.2 Digital display Description

Alpha numerical display format

Digit	LED	Letter	LED	Letter	LED	Symbol	LED
0	0	**A**	A	**n**	n	-	-
1	1	**b**	b	**o**	o	°	o
2	2	**C**	C	**P**	P	_	_
3	3	**d**	d	**q**	q	.	.
4	4	**E**	E	**r**	r		
5	5	**F**	F	**S**	S		
6	6	**G**	G	**t**	t		
7	7	**H**	H	**u**	u		
8	8	**J**	J	**V**	V		
9	9	**L**	L	**Y**	Y		

Digital display indication formats

Actual output frequency	Set frequency	
Digits are lit Continually	Preset digits flashing	Selected digit flashing
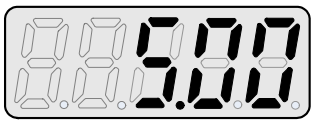	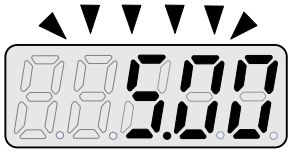	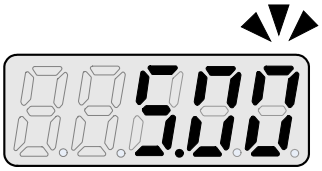

LED display examples

Display	Description
50.00	In stop mode shows the set frequency In run mode shows the actual output frequency
00-01	Selected Parameter
0	Parameter Value
220V	Output Voltage
1.1A	Output Current in Amps
310V	DC Bus voltage
24°C	Temperature
000--	PID feedback value
Err1	Error display
000000	Analogue Current / Voltage ACID / AVI . Range **(0~1000)**

LED Status description

	LED Indicator light Status			
Frequency / line speed Indicator	Hz/rpm	On		
Menu mode indicator	Fun	On while not displaying frequency or line speed		
FWD indicator	FWD	On while running forward	FWD	Flashing while stopped in Forward mode.
REV indicator light	REV	On while running reverse	REV	Flashing while stopped in Reverse mode

4.1.3 Digital display set up

On power up digital display screens will be as shown below.

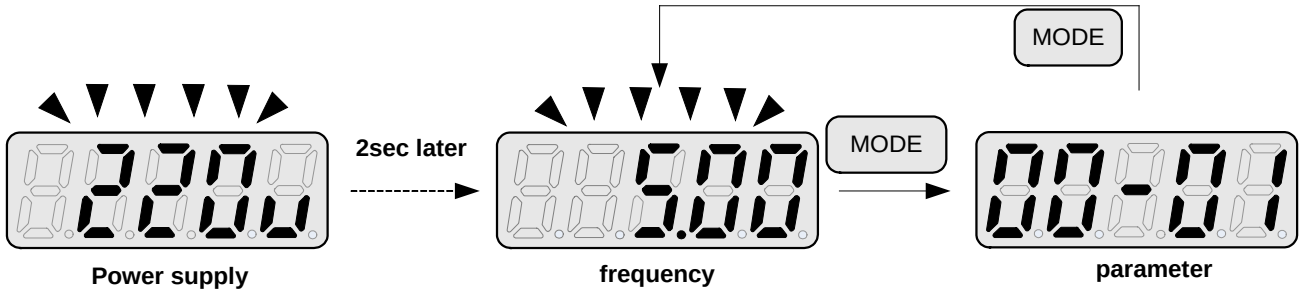

User selectable display formats:

12- 00	Display Mode
Range	**0 0 0 0 0** **high Low** **Each of the above 5 digits can be set to any of the selections below from 0 to 7** **【0】:Disable display** **【1】:output Current** **【2】:output Voltage** **【3】:DC voltage** **【4】:Temperature** **【5】:PID feedback** **【6】:AVI** **【7】:ACI**

The highest bit of 12-00 sets the power on the display, other bits set the selected display from range 0-7.as Listed above.

Example1: Set parameter 12- 00=【10000】to obtain display format shown below.

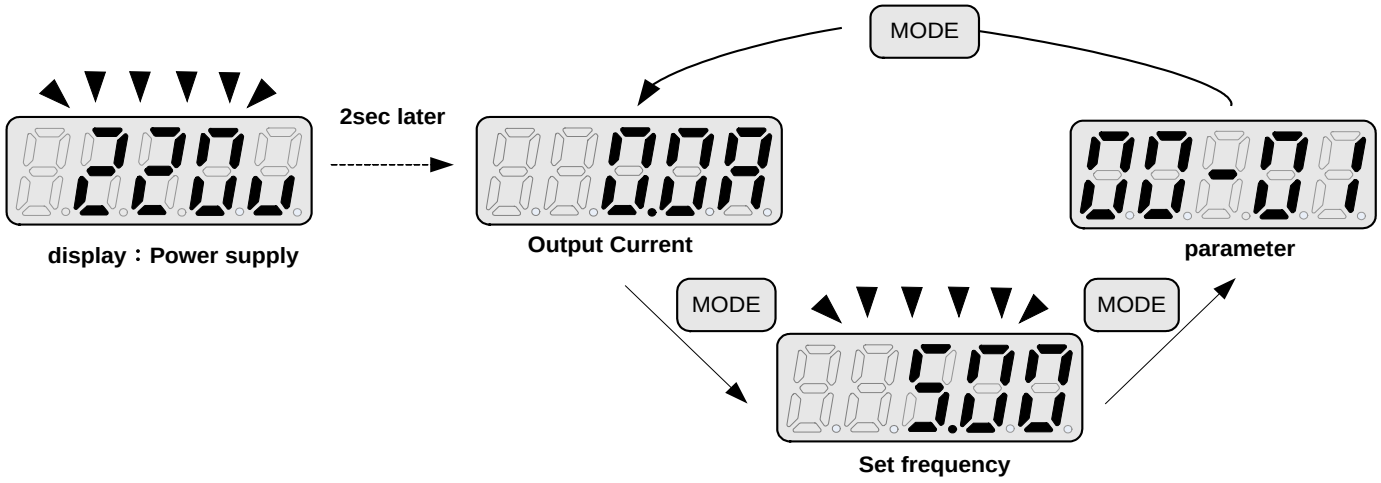

Example 2. Set parameter 2: 12- 00=【12345】 to obtain the display format shown below.

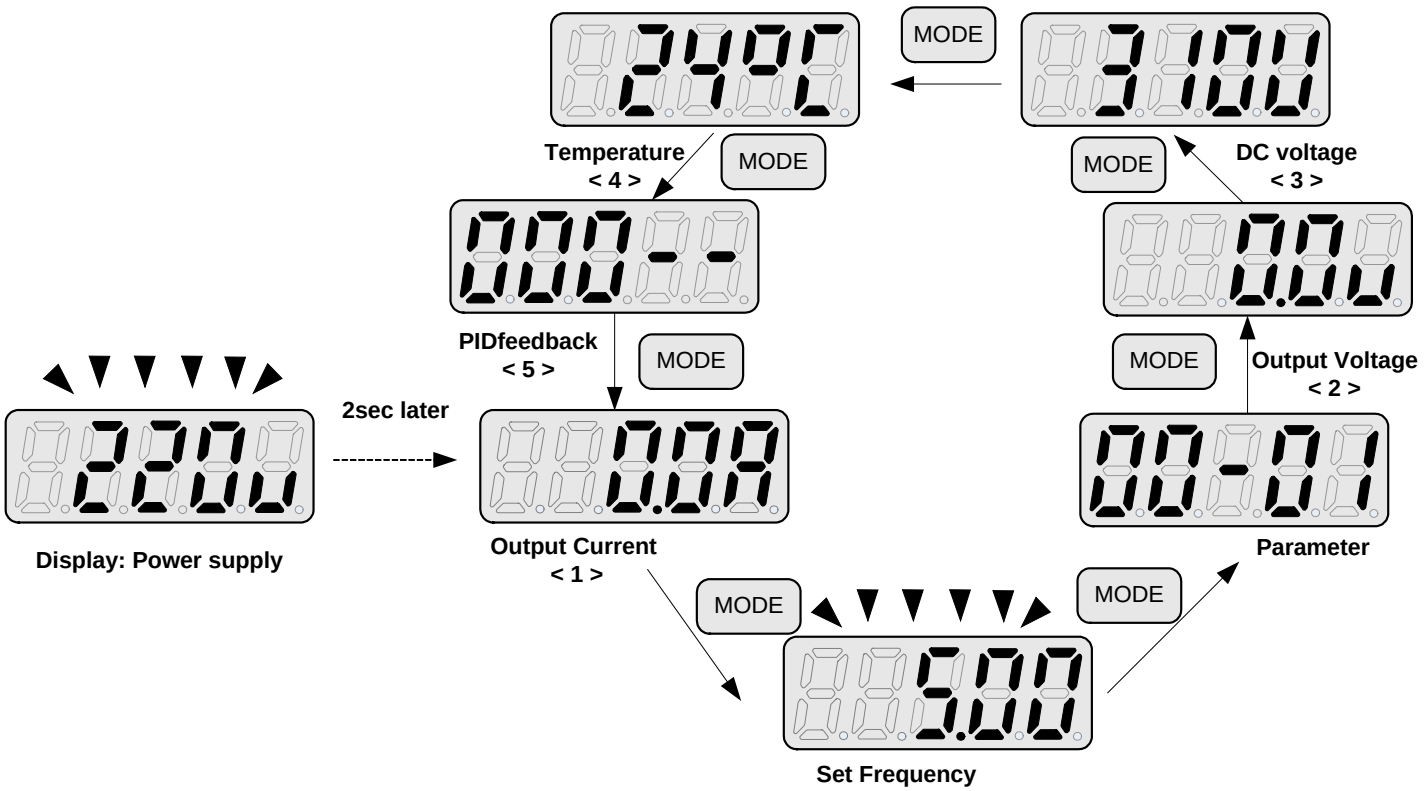

Increment/ Decrement key functions:

1.“ ▲ ”/ “ ▼ ” :

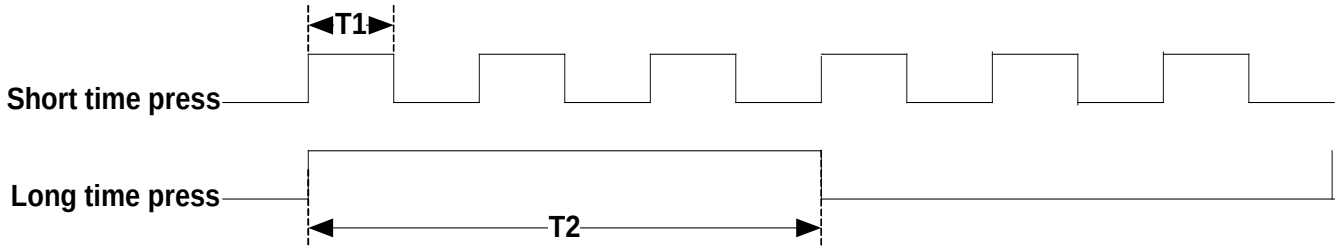

Quick pressing of these keys will Increment or Decrement the selected digit by one.
Extended pressing will Increment or Decrement the selected digit continuously.

2.“</ENT” Key functions :

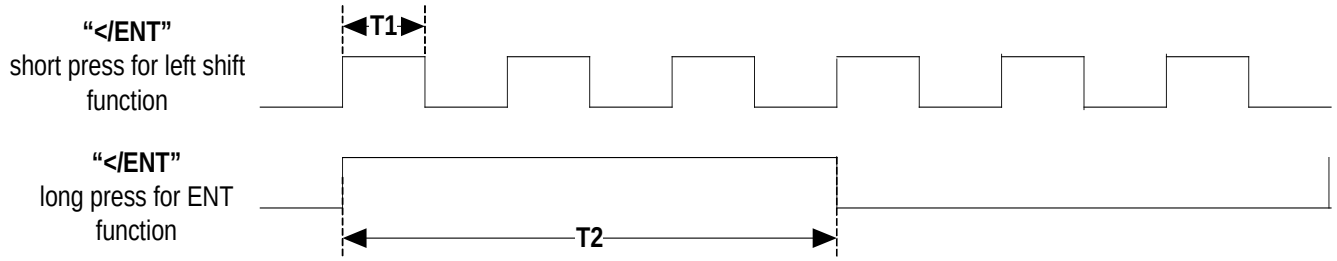

Quick pressing of this key will display the preset value of the parameter selected.
Extended pressing of this key will save the altered value of the selected parameter.

4.1.4 Example of keypad operation

Example 1: Modifying Parameters

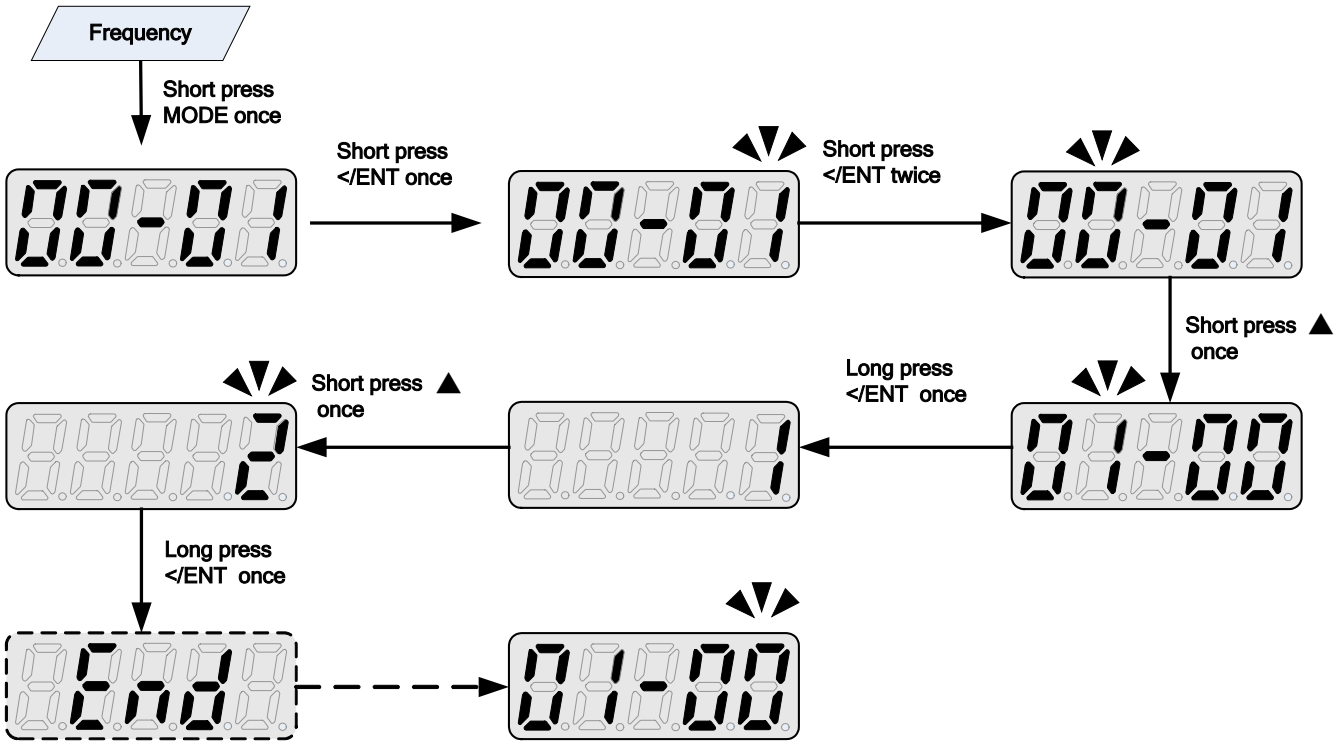

Example 2: Modifying the frequency from keypad in run and stop modes.

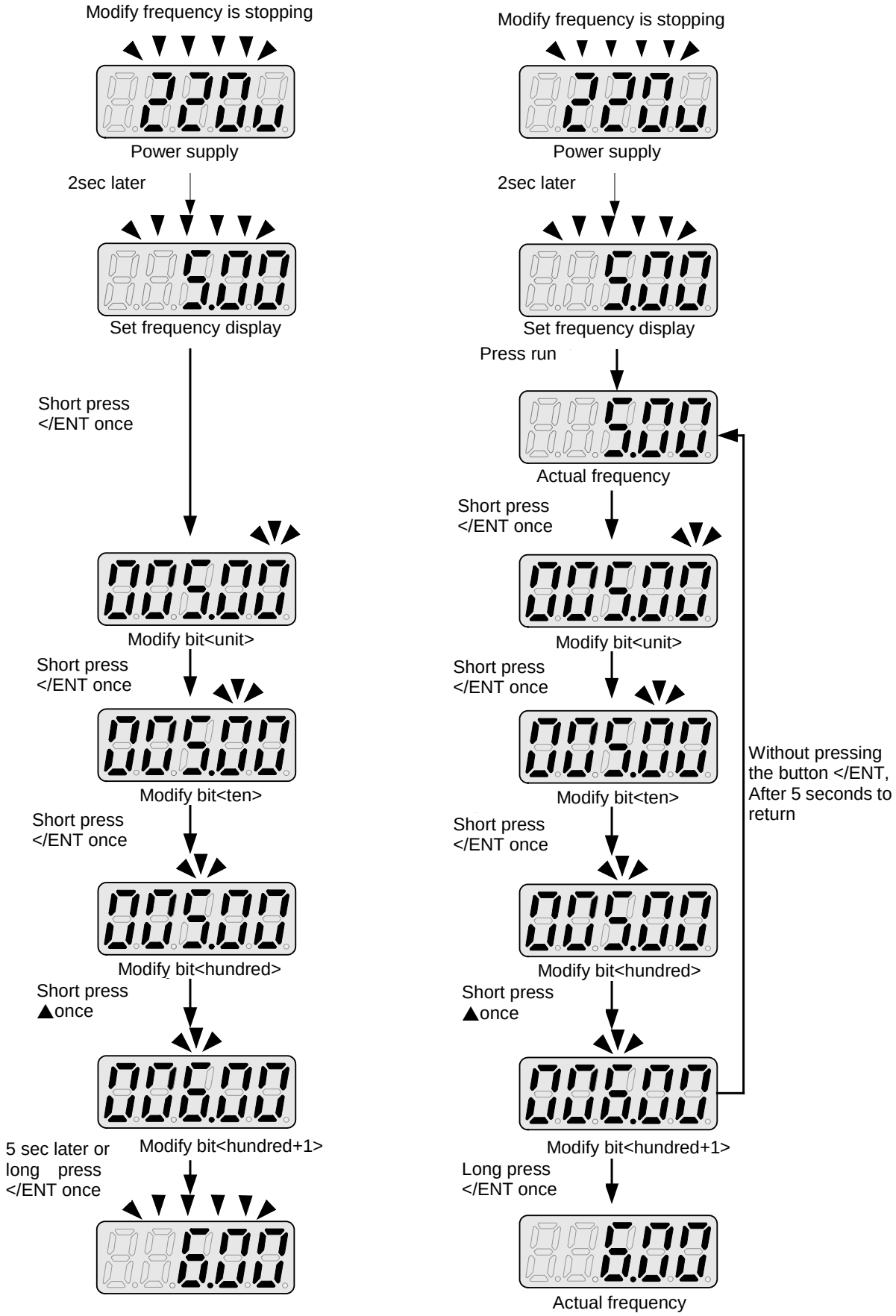

Note: frequency command setting will be limited to the range set by parameters for lower & upper frequency.

4.1.5 Operation Control

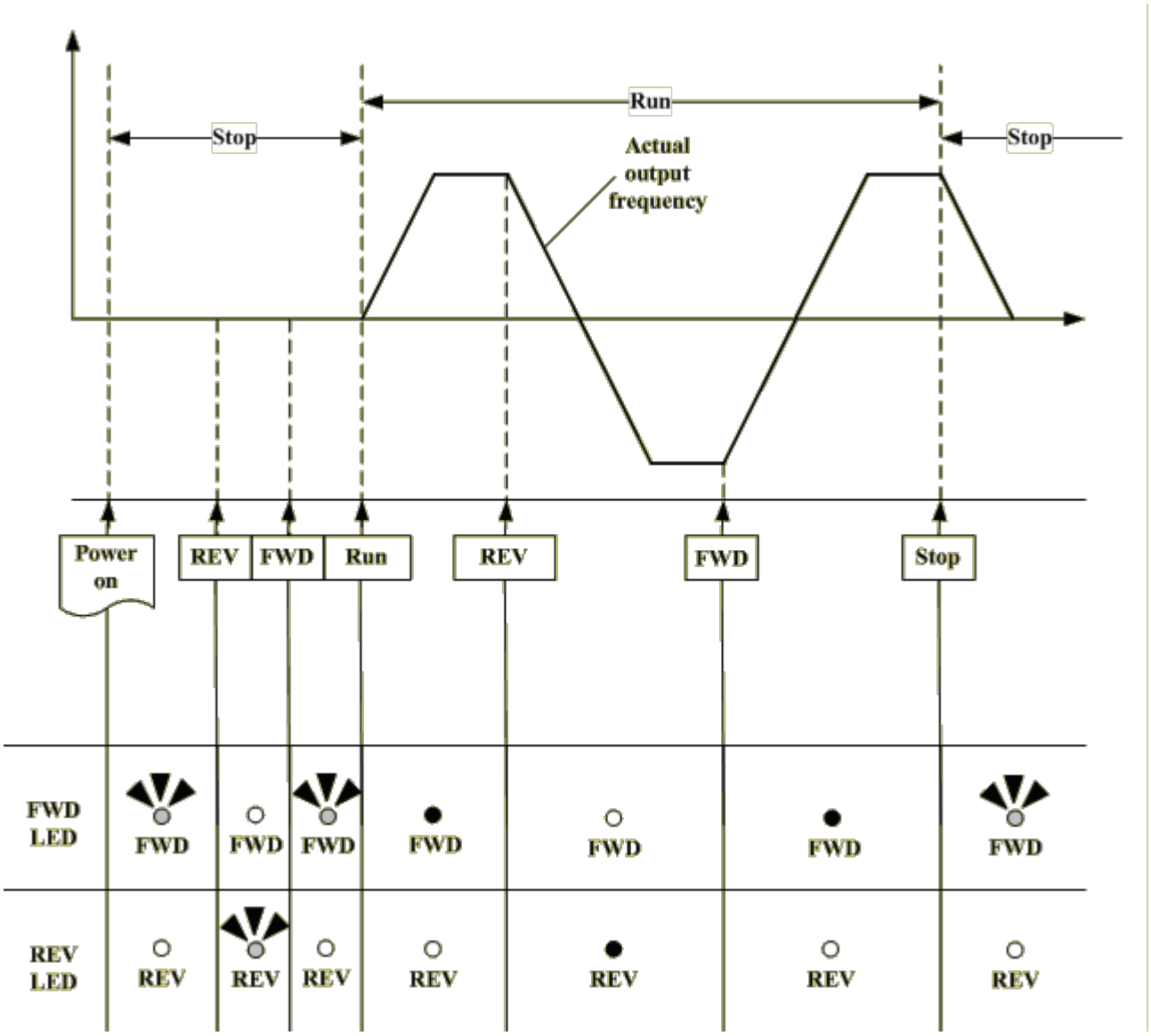

4.2 Programmable Parameter Groups

Parameter Group No.	Description
Group 00	Basic parameters
Group 01	V/F Pattern selections & setup
Group 02	Motor parameters
Group 03	Multi function digital Inputs/Outputs
Group 04	Analog signal inputs/ Analog output
Group 05	Preset Frequency Selections.
Group 06	Auto Run(Auto Sequencer) function
Group 07	Start/Stop command setup
Group 08	Drive and motor Protection
Group 09	Communication function setup
Group 10	PID function setup
Group 11	Performance control functions
Group 12	Digital Display & Monitor functions
Group 13	Inspection & Maintenance function

Parameter notes for Parameter Groups	
*1	Parameter can be adjusted during running mode
*2	Cannot be modified in communication mode
*3	Does not change with factory reset
*4	Read only

Group 00- The basic parameters group					
No.	**Description**	**Range**	**Factory Setting**	**Unit**	**Note**
00-00	Control mode	0:V/F mode 1:SLV mode	0	-	
00-01	Motor rotation	0:Forward 1:Reverse	0	-	*1
00-02	Main Run Source Selection	0:Keypad 1:External Run/Stop Control 2:Communication	0	-	
00-03	Alternative Run Source Selection	0:Keypad 1:External Run/Stop Control 2:Communication	0	-	
00-04	Operation modes for external terminals	0: Forward/Stop-Reverse/Stop 1: Run/Stop-Reverse/Forward 2: 3-Wire Control Mode-Run/Stop	0	-	
00-05	Main Frequency Source Selection	0: Frequency setting via ▼/▲ buttons 1:Potentiometer on keypad 2:External AVI Analog Signal Input 3:External ACI Analog Signal Input 4:External Up/Down Frequency Control 5:Communication setting Frequency 6:PID output frequency	0	-	
00-06	Alternative Frequency Source Selection	0: Frequency setting via ▼/▲ buttons 1:Potentiometer on keypad 2:External AVI Analog Signal Input 3:External ACI Analog Signal Input 4:External Up/Down Frequency Control 5:Communication setting Frequency 6:PID output frequency.	4	-	
00-07	Main and Alternative Frequency Command modes	0: Main Or Alternative Frequency 1: Main frequency+Alternative Frequency	0	-	
00-08	Communication Frequency Command	0.00~599.00		Hz	*4
00-09	Frequency command Save mode (Communication mode)	0:Save the frequency before power down 1:Save the communication frequency	0	-	
00-10	Initial Frequency Selection (keypad mode)	0:by Current Frequency Command 1:by 0 Frequency Command 2:by 00-11	0	-	
00-11	Initial Frequency Keypad mode	0.00~599.00	50.00/60.00	Hz	
00-12	Frequency Upper Limit	0.01~599.00	50.00/60.00	Hz	
00-13	Frequency Lower Limit	0.00~598.99	0.00	Hz	
00-14	Acceleration Time 1	0.1~3600.0	10.0	s	*1
00-15	Deceleration Time 1	0.1~3600.0	10.0	s	*1
00-16	Acceleration Time 2	0.1~3600.0	10.0	s	*1
00-17	Deceleration Time 2	0.1~3600.0	10.0	s	*1
00-18	Jog Frequency	1.00~25.00	2.00	Hz	*1
00-19	Jog Acceleration Time	0.1~25.5	0.5	s	*1
00-20	Jog Deceleration Time	0.1~25.5	0.5	s	*1

Group 01- V/F Pattern selection & Setup					
No.	**Description**	**Range**	**Factory Setting**	**Unit**	**Note**
01-00	Volts/Hz Patterns	1~7	1/4	-	
01-01	V/F Max voltage	200V:170.0~264.0 400V:323.0~528.0	Based on 13-08	Vac	
01-02	Max Frequency	0.2 ~ 599.00	50.00/60.00	Hz	
01-03	Max Frequency Voltage Ratio	0.0 ~ 100.0	100.0	%	
01-04	Mid Frequency 2	0.1 ~ 599.00	2.50/3.00	Hz	
01-05	Mid Frequency Voltage Ratio 2	0.0 ~ 100.0	10.0/6.8	%	
01-06	Mid Frequency 1	0.1 ~ 599.00	2.50/3.00	Hz	
01-07	Mid Frequency Voltage Ratio 1	0.0 ~ 100.0	10.0/6.8	%	
01-08	Min Frequency	0.1 ~ 599.00	1.30/1.50	Hz	
01-09	Min Frequency Voltage Ratio	0.0 ~ 100.0	8.0/3.4	%	
01-10	Volts/Hz Curve Modification (Torque Boost)	0 ~ 10.0	0.0	%	*1
01-11	V/F start Frequency	0.00~10.00	0.00	Hz	
01-12	No-load oscillation suppression gain	0.0~200.0	0	%	
01-13	Motor Hunting Prevention Coefficient	1~8192	800		
01-14	Motor Hunting Prevention Gain	0~100	Frame 1/2 100V/200V series: 7 others: 0	%	
01-15	Motor Hunting Prevention Limit	0~100.0	5.0	%	
01-16	Auto-Torque Compensation Filter Coefficient	0.1~1000.0	0.1	ms	
01-17	Auto-torque Compensation Gain	0~100	0	%	
01-18	Auto-torque Compensation Frequency	1.30~5.00	2	Hz	

Group 02- Motor parameters					
No.	**Description**	**Range**	**Factory Setting**	**Unit**	**Note**
02-00	Motor No Load Current	----	By motor nameplate	A	*4
02-01	Motor Rated Current (OL1)	----	By motor nameplate	A	*4
02-02	V/F Slip Compensation	0.0 ~ 100.0	0.0	%	*1
02-03	Motor Rated Speed	----	By motor nameplate	rpm	*4
02-04	Motor Rated Voltage	----	By motor nameplate	Vac	*4
02-05	Motor Rated Power	0~22.0	By motor nameplate	kW	
02-06	Motor Rated Frequency	0~599.0	By motor nameplate		
02-07	Motor Auto Tuning	0: Disable 1: Static auto tuning	0		
02-08	Stator Resistor Gain	0~600	by series		
02-09	Rotor Resistor Gain	0~600	by series		
02-10	Reserved				
02-11	Reserved				
02-12	Reserved				
02-13	SLV Slip Compensation Gain	0~200	by series	%	
02-14	SLV Torque Compensation Gain	0~200	100	%	

Group 02- Motor parameters					
No.	**Description**	**Range**	**Factory Setting**	**Unit**	**Note**
02-15	Low Frequency Torque Gain	0~100	50	%	
02-16	SLV Without Load Slip Compensation Gain	0~200	by series	%	
02-17	SLV With Load Slip Compensation Gain	0~200	150	%	

Group 03- Multi function Digital Inputs/Outputs					
No.	**Description**	**Range**	**Factory Setting**	**Unit**	**Note**
03-00	Multifunction Input Term. S1	0:Forward/Stop Command or Run /Stop	0	-	
03-01	Multifunction Input Term. S2	1:Reverse/Stop Command Or REV/FWD	1	-	
03-02	Multifunction Input Term. S3	2:Preset Speed 1 (5-02)	2	-	
03-03	Multifunction Input Term. S4	3:Preset Speed 2 (5-03)	3	-	
03-04	Multifunction Input Term. S5	4:Preset Speed 4 (5-05)	17	-	
		6:Jog Forward Command			
		7:Jog Reverse Command			
		8:Up Command			
		9:Down Command			
		10:Acc/Dec 2			
		11:Acc/Dec Disabled			
		12:Main/Alternative Run Command select			
		13:Main/Alternative Frequency Command select			
		14:Rapid Stop (Decel to stop)			
		15:Base Block			
		16:Disable PID Function			
		17:Reset			
		18:Auto Run Mode enable			
03-05	Reserved				
03-06	Up/Down frequency band	0.00~5.00	0.00	Hz	
03-07	Up/Down Frequency modes	0:Preset frequency is held as the inverter stops, and the UP/Down function is disabled.	0	-	
		1:Preset frequency is reset to 0 Hz as the inverter stops.			
		2:Preset frequency is held as the inverter stops, and the UP/Down is available.			
03-08	S1~S5 scan confirmation	1~200. Number of Scan cycles	10	ms	
03-09	S1~ S5 switch type select	xxxx0:S1 NO xxxx1:S1 NC	00000	-	
		xxx0x:S2 NO xxx1x:S2 NC			
		xx0xx:S3 NO xx1xx:S3 NC			
		x0xxx:S4 NO x1xxx:S4 NC			
		0xxxx:S5 NO 1xxxx:S5 NC			
03-10	Reserved				
03-11	Output Relay(RY1)	0:Run	0	-	
		1:Fault			

Group 03- Multi function Digital Inputs/Outputs					
No.	**Description**	**Range**	**Factory Setting**	**Unit**	**Note**
		2:Setting Frequency Reached			
		3:Frequency Reached (3-13±3-14)			
		4:Output Frequency Detection1(> 3-13)			
		5:Output Frequency Detection2(< 3-13)			
		6:Auto-Restart			
		7:Momentary AC Power Loss			
		8:Rapid Stop			
		9:Base Block			
		10:Motor Overload Protection(OL1)			
		11:Drive Overload Protection(OL2)			
		12:Reserved			
		13:Output Current Reached			
		14:Brake Control			
		15:PID feedback disconnection detection			
03-12	Reserved				
03-13	Output frequency detection level (Hz)	0.00~599.00	0.00	Hz	*1
03-14	Frequency Detection band	0.00~30.00	2.00	Hz	*1
03-15	Output Current Detection Level	0.1~15.0	0.1	A	
03-16	Output Current Detection Period	0.1~10.0	0.1	s	
03-17	External Brake Release level	0.00~20.00	0.00	Hz	
03-18	External Brake Engage Level	0.00~20.00	0.00	Hz	
03-19	Relay Output function type	0:A (Normally open) 1:B (Normally close)	0	-	
03-20	Braking Transistor On Level	200V: 240.0~400.0V 400V: 500.0~800.0V	220/230V:380 380/400V:690 415/460V:780	VDC	
03-21	Brake Transistor Off Level	200V: 240.0~400.0V 400V: 500.0~800.0V	220/230V:360 380/400V:650 415/460V:740	VDC	

※ “NO” indicates normally open, “NC” indicates normally closed.

Group 04- Analog signal inputs/ Analogue output functions					
No.	**Description**	**Range**	**Factory Setting**	**Unit**	**Note**
04-00	AVI/ACI analog Input signal type select	AVI ACI 0:0~10V 0~20mA 1:0~10V 4~20mA 2:2~10V 0~20mA 3:2~10V 4~20mA	0	-	
04-01	AVI Signal Verification Scan rate	1~200	50	2ms	
04-02	AVI Gain	0 ~ 1000	100	%	*1
04-03	AVI Bias	0 ~ 100	0	%	*1
04-04	AVI Bias Selection	0: Positive 1: Negative	0	-	*1
04-05	AVI Slope	0: Positive 1: Negative	0	-	*1
04-06	ACI Signal Verification Scan rate	1~200	50	2ms	
04-07	ACI Gain	0 ~ 1000	100	%	*1
04-08	ACIBias	0 ~ 100	0	%	*1
04-09	ACI Bias Selection	0: Positive 1: Negative	0	-	*1
04-10	ACI Slope	0: Positive 1: Negative	0	-	*1
04-11	Analog Output mode(AO)	0: Output Frequency 1: Frequency Command 2: Output Voltage 3: DC Bus Voltage 4: Motor Current	0	-	*1
04-12	Analog Output AO Gain (%)	0 ~ 1000	100	%	*1
04-13	Analog Output AO Bias (%)	0 ~ 1000	0	%	*1
04-14	AO Bias Selection	0: Positive 1: Negative	0	-	*1
04-15	AO Slope	0: Positive 1: Negative	0	-	*1

Group 05- Preset Frequency Selections.					
No.	**Description**	**Range**	**Factory Setting**	**Unit**	**Note**
05-00	Preset Speed Control mode Selection	0: Common Accel/Decel Accel/Decel 1 or 2 apply to all speeds 1: Individual Accel/Decel Accel/ Decel 0-7 apply to the selected preset speeds (Acc0/Dec0~ Acc7/Dec7)	0	-	
05-01	Preset Speed 0 (Keypad Freq)	0.00 ~ 599.00	5.00	Hz	*1
05-02	Preset Speed1 (Hz)		5.00	Hz	*1
05-03	Preset Speed2 (Hz)		10.00	Hz	*1
05-04	Preset Speed3 (Hz)		20.00	Hz	*1
05-05	Preset Speed4 (Hz)		30.00	Hz	*1
05-06	Preset Speed5 (Hz)		40.00	Hz	*1
05-07	Preset Speed6 (Hz)		50.00	Hz	*1
05-08	Preset Speed7 (Hz)		50.00	Hz	*1
05-09 ~ 05-16	Reserved				
05-17	Preset Speed0-Acctime	0.1 ~ 3600.0	10.0	s	*1
05-18	Preset Speed0-Dectime		10.0	s	*1
05-19	Preset Speed1-Acctime		10.0	s	*1
05-20	Preset Speed1-Dectime		10.0	s	*1
05-21	Preset Speed2-Acctime		10.0	s	*1
05-22	Preset Speed2-Dectime		10.0	s	*1
05-23	Preset Speed3-Acctime		10.0	s	*1
05-24	Preset Speed3-Dectime		10.0	s	*1
05-25	Preset Speed4-Acctime		10.0	s	*1
05-26	Preset Speed4-Dectime		10.0	s	*1
05-27	Preset Speed5-Acctime		10.0	s	*1
05-28	Preset Speed5-Dectime		10.0	s	*1
05-29	Preset Speed6-Acctime		10.0	s	*1
05-30	Preset Speed6-Dectime		10.0	s	*1
05-31	Preset Speed7-Acctime		10.0	s	*1
05-32	Preset Speed7-Dectime		10.0	s	*1

Group 06- Auto Run(Auto Sequencer) function					
No.	**Description**	**Range**	**Factory Setting**	**Unit**	**Note**
06-00	Auto Run (sequencer) mode selection	0: Disabled. 1: Single cycle. (Continues to run from the Unfinished step if restarted). 2: Periodic cycle. (Continues to run from the unfinished step if restarted). 3: Single cycle, then holds the speed of final step to run. (Continues to run from the unfinished step if restarted). 4: Single cycle. (Starts a new cycle if restarted). 5: Periodic cycle. (Starts a new cycle if restarted). 6: Single cycle, then hold the speed of final step to run (Starts a new cycle if restarted).	0	-	
06-01	Auto _ Run Mode frequency command 1	0.00~599.00	0.00	Hz	*1
06-02	Auto _ Run Mode frequency command 2		0.00	Hz	*1
06-03	Auto _ Run Mode frequency command 3		0.00	Hz	*1
06-04	Auto _ Run Mode frequency command 4		0.00	Hz	*1
06-05	Auto _ Run Mode frequency command 5		0.00	Hz	*1
06-06	Auto _ Run Mode frequency command 6		0.00	Hz	*1
06-07	Auto _ Run Mode frequency command 7		0.00	Hz	*1
06-08 ~ 06-15	Reserved				
06-16	Auto_ Run Mode running time setting 0	0.0 ~ 3600.0	0.0	s	*1
06-17	Auto_ Run Mode running time setting 1		0.0	s	*1
06-18	Auto_ Run Mode running time setting 2		0.0	s	*1
06-19	Auto_ Run Mode running time setting 3		0.0	s	*1
06-20	Auto_ Run Mode running time setting 4		0.0	s	*1
06-21	Auto_ Run Mode running time setting 5		0.0	s	*1
06-22	Auto_ Run Mode running time setting 6		0.0	s	*1
06-23	Auto_ Run Mode running time setting 7		0.0	s	*1
06-24 ~ 06-31	Reserved				
06-32	Auto_ Run Mode running direction 0	0: Stop 1: Forward 2: Reverse	0	-	
06-33	Auto_ Run Mode running direction 1		0	-	

Group 06- Auto Run(Auto Sequencer) function					
No.	**Description**	**Range**	**Factory Setting**	**Unit**	**Note**
06-34	Auto_ Run Mode running direction 2		0	-	
06-35	Auto_ Run Mode running direction 3		0	-	
06-36	Auto_ Run Mode running direction 4		0	-	
06-37	Auto_ Run Mode running direction 5		0	-	
06-38	Auto_ Run Mode running direction 6		0	-	
06-39	Auto_ Run Mode running direction 7		0	-	

Group 07- Start/Stop command setup					
No.	**Description**	**Range**	**Factory Setting**	**Unit**	**Note**
07-00	Momentary Power Loss and Restart	0: Momentary Power Loss and Restart disable 1: Momentary power loss and restart enable	0	s	
07-01	Auto Restart Delay Time	0.0~800.0	0.0	s	
07-02	Number of Auto Restart Attempts	0~10	0	-	
07-03	Reset Mode Setting	0: Enable Reset Only when Run Command is Off 1: Enable Reset when Run Command is On or Off	0	-	
07-04	Direct Running After Power Up	0: Enable Direct run on power up 1: Disable Direct run on power up	1	-	
07-05	Delay-ON Timer	1.0~300.0	1.0	s	
07-06	DC Injection Brake Start Frequency (Hz) In Stop mode	0.10 ~ 10.00	1.5	Hz	
07-07	DC Injection Brake Level (%) In stop mode	0 ~ 20 (Frame1/2). Based on the 20% of maximum output voltage	5	%	
		0 ~ 100 (Frame3/4) based on the rated current	50		
07-08	DC Injection Brake Time (Seconds) In stop mode	0.0 ~ 25.5	0.5	s	
07-09	Stopping Method	0: Deceleration to stop 1: Coast to stop	0		

Group 08- Drive & Motor Protection functions					
No.	**Description**	**Range**	**Factory Setting**	**Unit**	**Note**
08-00	Trip Prevention Selection	xxxx0: Enable Trip Prevention During Acceleration xxxx1: Disable Trip Prevention During Acceleration xxx0x: Enable Trip Prevention During Deceleration xxx1x: Disable Trip Prevention During Deceleration xx0xx: Enable Trip Prevention in Run Mode xx1xx: Disable Trip Prevention in Run Mode x0xxx: Enable over voltage Prevention in Run Mode x1xxx: Disable over voltage Prevention in Run Mode	00000	-	
08-01	Trip Prevention Level During Acceleration (%)	50 ~ 200	by series	Inverter Rated Current 100%	
08-02	Trip Prevention Level During Deceleration (%)	50 ~ 200	by series		
08-03	Trip Prevention Level In Run Mode (%)	50 ~ 200	by series		
08-04	Over voltage Prevention Level in Run Mode	230V: 350.0~390.0 400V: 700.0~780.0	380.0/760.0	VDC	*1
08-05	Electronic Motor Overload Protection Operation Mode	xxxx0: Disable Electronic Motor Overload Protection xxxx1: Enable Electronic Motor Overload Protection xxx0x: Motor Overload Cold Start xxx1x: Motor Overload Hot Start xx0xx: Standard Motor xx1xx: Invertor Duty Motor (Force Vent)	00001	-	
08-06	Operation After Overload Protection is Activated	0: Coast-to-Stop After Overload Protection is Activated 1: Drive Will Not Trip when Overload Protection is Activated (OL1)	0	-	
08-07	Over heat Protection (cooling fan control)	0: Auto (Depends on temp.) 1: Operate while in RUN mode 2: Always Run 3: Disabled	1	-	
08-08	AVR Function (Auto Voltage Regulation)	0: AVR function enable 1: AVR function Disable 2: AVR function disable for stop 3: AVR function disable for deceleration 4: AVR function disable for stop and deceleration. 5: When VDC>(360V/740V), AVR function disable for stop and deceleration.	4	-	
08-09	Input phase lost protection	0: Disabled 1: Enabled	0	-	
08-10	PTC Overheat Function	0: Disable	0		
		1: Decelerate to stop			

Group 08- Drive & Motor Protection functions					
No.	**Description**	**Range**	**Factory Setting**	**Unit**	**Note**
		2: Coast to stop			
		3: Continue running, when **warning level** is reached. Coast to stop, when **protection level** is reached.			
08-11	PTC Signal Smoothing Time	0.01~10.00	0.2	s	
08-12	PTC Detection Time Delay	1~300	60	s	
08-13	PTC Protection Level	0.1~10.0	0.7	V	
08-14	PTC Detection Level Reset	0.1~10.0	0.3	V	
08-15	PTC Warning Level	0.1~10.0	0.5	V	
08-16	Fan Control Temperature Level	10.0~50.0	50.0	° C	
08-17	Over current protection level	0.0 ~ 60.0	0.0	A	
08-18	Over current protection time	0.0 ~ 1500.0	1.0	s	

Group 09- Communication function setup					
No.	**Description**	**Range**	**Factory Setting**	**Unit**	**Note**
09-00	Assigned Communication Station Number	1 ~ 32	1	-	*2*3
09-01	Communication Mode Select	0:Modbus RTU code 1:Modbus ASCII code 2:BACnet	0	-	*2*3
09-02	Baud Rate Setting (bps)	0:4800 1:9600 2:19200 3:38400	2	bps	*2*3
09-03	Stop Bit Selection	0:1 Stop Bit 1:2 Stop Bits	0	-	*2*3
09-04	Parity Selection	0:Without Parity 1:With Even Parity 2:With Odd Parity	0	-	*2*3
09-05	Data Format Selection	0: 8-Bits Data 1: 7-Bits Data	0	-	*2*3
09-06	Communication time-out detection time	0.0 ~ 25.5	0.0	s	
09-07	Communication time-out operation selection	0: Deceleration to stop (set by 00-15: Deceleration time 1) 1: Coast to stop 2: Deceleration to stop (set by 00-17: Deceleration time 2) 3: continue operating	0	-	
09-08	Error 6 verification time	0 ~ 20	3		
09-09	Drive Transmit	5 ~ 65	5	2ms	

	delay Time (ms)				
09-10	BACnet stations	1~254	1		

Group10- PID function Setup					
No.	**Description**	**Range**	**Factory Setting**	**Unit**	**Note**
10-00	PID target value selection (when 00-05\00-06=6, this function is enabled)	0:Potentiometer on Keypad 1: Analog Signal Input. (AVI) 2: Analog Signal Input. (ACI) 3: Frequency set by communication 4: Keypad Frequency parameter 10-02 5: Preset frequency	1	-	*1
10-01	PID feedback value selection	0: Potentiometer on Keypad 1: Analog Signal Input. (AVI) 2: Analog Signal Input. (ACI) 3: Communication Setting Frequency	2	-	*1
10-02	PID Target (keypad input)	0.0~100.0	50.0	%	*1
10-03	PID Mode Selection	0:Disabled 1: Deviation D Control. FWD Characteristic. 2: Feedback D Control FWD Characteristic. 3: Deviation D Control Reverse Characteristic. 4: Feedback D Control Reverse Characteristic. 5: Frequency Command + Deviation D Control. FWD Characteristic. 6: Frequency Command + Feedback D Control FWD Characteristic. 7: Frequency Command + Deviation D Control Reverse Characteristic. 8: Frequency Command + Feedback D Control Reverse Characteristic.	0	-	
10-04	Feedback Gain Coefficient	0.00 ~ 10.00	1.00	%	*1
10-05	Proportional Gain	0.0 ~ 10.0	1.0	%	*1
10-06	Integral Time	0.0 ~ 100.0	10.0	s	*1
10-07	Derivative Time	0.00 ~ 10.00	0.00	s	*1
10-08	PID Offset	0: Positive 1: Negative	0	-	*1
10-09	PID Offset Adjust	0 ~ 109	0	%	*1
10-10	PID Output Lag Filter Time	0.0 ~ 2.5	0.0	s	*1
10-11	Feedback Loss Detection Mode	0: Disabled 1: Enabled - Drive Continues to Operate After Feedback Loss 2: Enabled - Drive "STOPS" After Feedback Loss	0	-	
10-12	Feedback Loss Detection Level	0 ~ 100	0	%	
10-13	Feedback Loss Detection Delay Time	0.0 ~25.5	1.0	s	
10-14	Integration Limit Value	0 ~ 109	100	%	*1
10-15	Integral Value Resets to Zero when Feedback Signal Equals the Target Value	0:Disabled 1: 1 Second 30: 30 Seconds (0 ~ 30)	0	-	

Group10- PID function Setup					
No.	**Description**	**Range**	**Factory Setting**	**Unit**	**Note**
10-16	Allowable Integration Error Margin (units) (1unit = 1/8192)	0 ~ 100	0	-	
10-17	PID Sleep Frequency Level	0.00~599.00	0.00	Hz	
10-18	PID Sleep Function Delay Time	0.0 ~25.5	0.0	s	
10-19	PID Wake up frequency Level	0.00 ~ 599.00	0.00	Hz	
10-20	PID Wake up function Delay Time	0.0 ~ 25.5	0.0	s	
10-21	Max PID Feedback Setting	0 ~999	100	-	*1
10-22	Min PID Feedback Setting	0 ~999	0	-	*1

Group11- Performance Control functions					
No.	**Description**	**Range**	**Factory Setting**	**unit**	**Note**
11-00	Reverse operation control	0: Reverse command is enabled 1: Reverse command is disabled	0	-	
11-01	Carrier Frequency (kHz)	1~16	5	KHz	
11-02	Carrier mode Selection	0: Mode0, 3ph PWM modulation 1: Mode1, 2ph PWM modulation 2: Mode2, random modulation	1	-	
11-03	Carrier Frequency Reduction by temperature rise	0: disabled 1: enabled	0	-	
11-04	S-Curve Acc 1	0.0 ~ 4.0	0.00	s	
11-05	S-Curve Acc 2	0.0 ~ 4.0	0.00	s	
11-06	S-Curve Dec 3	0.0 ~ 4.0	0.00	s	
11-07	S-Curve Dec 4	0.0 ~ 4.0	0.00	s	
11-08	Skip Frequency 1	0.00 ~ 599.00	0.00	Hz	*1
11-09	Skip Frequency 2	0.00 ~ 599.00	0.00	Hz	*1
11-10	Skip Frequency 3	0.00 ~ 599.00	0.00	Hz	*1
11-11	Skip Frequency Bandwidth (±)	0.00 ~ 30.00	0.00	Hz	*1
11-12	Reserved				
11-13	Regeneration Prevention Function	0: Disable 1: Enable 2: Enable (during constant speed only)	0	-	
11-14	Regeneration Prevention Voltage Level	200V: 300.0~400.0 400V: 600.0~800.0	380/760	V	
11-15	Regeneration Prevention Frequency Limit	0.00 ~ 15.00	3.00	Hz	
11-16	Regeneration Prevention Voltage Gain	0~200	100	%	
11-17	Regeneration Prevention Frequency Gain	0~200	100	%	
11-18	Speed loop proportion gain	0~65535	10000		
11-19	Speed loop integration gain	0 ~65535	800		
11-20	Speed loop differential gain	0 ~65535	0		

Group12 Digital Display & Monitor functions					
No.	**Description**	**Range**	**Factory Setting**	**Unit**	**Note**
12-00	Extended Display Mode	00000 ~77777. Each digit can be set to 0 to 7 0: Default display (frequency&parameters) 1:Output Current 2:Output Voltage 3:DC voltage 4: Heatsink Temperature 5:PID feedback 6:Analog Signal Input. (AVI) 7:Analog Signal Input. (ACI)	00000	-	*1
12-01	PID Feedback Display format	0: Integer (xxx) 1:One decimal Place (xx.x) 2:Two Decimal Places (x.xx)	0	-	*1
12-02	PID Feedback Display Unit Setting	0:xxx-- 1:xxxpb (pressure) 2:xxxfl (flow)	0	-	*1
12-03	Custom Units (Line Speed) Value	0~65535	1500/1800	rpm	*1
12-04	Custom Units (Line Speed) Display Mode	0:Drive Output Frequency is Displayed 1:Line Speed. Integer.(xxxxx) 2:Line Speed..One Decimal Place (xxxx.x) 3:Line Speed.Two Decimal Places (xxx.xx) 4:Line Speed.Three Decimal Places (xx.xxx)	0	-	*1
12-05	Inputs and output Logic status display (S1 to S5) & RY1	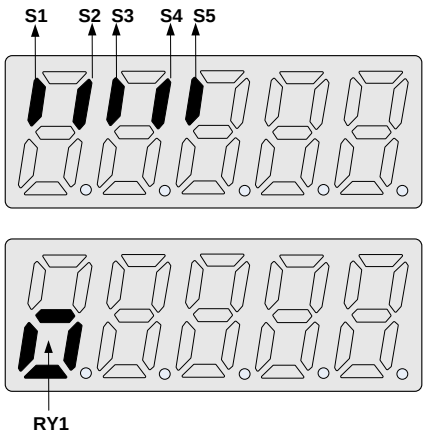	-----	-	*4

Group 13 Inspection & Maintenance functions					
No.	**Description**	**Range**	**Factory Setting**	**unit**	**Note**
13-00	Drive Horsepower Code	----	-	-	*3
13-01	Software Version	----	-	-	*3*4
13-02	Fault Log (Last 3 Faults)	----	-	-	*3*4
13-03	Accumulated Operation Time1 1	0~23	-	hour	*3
13-04	Accumulated Operation Time1 2	0~65535	----	day	*3
13-05	Accumulated Operation Time Mode	0:Time Under Power 1:Run Mode Time Only	0	-	*3
13-06	Parameter Lock	0: Enable all Functions 1: Preset speeds 05-01~05-08 cannot be changed 2: All Functions cannot be changed Except for Preset speeds 05-01~05-08 3: Disable All Function	0	-	
13-07	Parameter Lock Code	00000~65535	00000	-	
13-08	Restore Factory Settings	1150: Reset to factory setting. (50Hz,220V/380V) 1160: Reset to factory setting. (60Hz,220V/380V) 1250: Reset to factory setting. (50Hz,230V/400V) 1260: Reset to factory setting. (60Hz,230V/460V) 1350: Reset to factory setting. (50Hz,220V/415V) 1360: Reset to factory setting. (60Hz,230V/400V)	1250/1360 (*)	-	

(*) Notes:

For built-in EMC filter models, the default setting of 13-08 is “1250”.

For without built-in EMC filter models, the default setting of 13-08 is “1360”

4.3 Parameter Function Description

00- Basic parameter group

00- 00	Control mode
Range	【0】: V/F mode 【1】: SLV mode

Select the relevant control mode for the application, using parameter 00-00 Control mode.
Default control mode is V/F.

- **V/F mode** can be used for most applications specifically multi-motor or applications where auto tune is not successful or when a customized V/F pattern may be required.

  Several V/f patterns are available selectable by parameter 01-00.
  Select the appropriate V/f pattern based on the application load type and the motor base frequency of 50 or 60 Hz.
  For selections of the V/f patterns. Refer to description of parameter 01-00

- **SLV (Sensor less vector)** is used for obtaining best performance from a motor. Specially at low speeds or for applications with dynamic speed change.

00- 01	Motor Direction Control
Range	【0】: Forward 【1】: Reverse

- 00 - 01 Is valid in key pad mode only.

※Note: When Reverse function is disabled by parameter 11- 00=1 setting 00-01 to 1 .” LOC” will be displayed

00- 02	Main Run Command Source selection
00- 03	Alternative Run Command Source selection
Range	【0】: Keypad 【1】: External Run/Stop Control 【2】: Communication

- Parameter 00 - 02/00- 03 sets the inverter operation command source. For switching between 00-02 and 00-03, use any of the external inputs S1 to S5 and set the relevant parameters (03-00~03-04) to [12]. refer to parameter group3.

00- 04	Operation modes for external terminals
Range	【0】: Forward/stop-reverse/stop 【1】: Run/stop-forward/reverse 【2】: 3-wire control mode -run/stop

- Parameter 00-04 sets the function of the “External Run/Stop” and it is used in conjunction with Parameters:

  00-02 (Main Run Source) = 1 (External Run/Stop)
  Or
  00-03 (Alternative Run source) = 1 (External Run /Stop)
  And
  Parameters 03-00 to 03-04 which are used to set the required function for the digital inputs

[S1 to S5 (multi-function inputs)].

※Note 1: Parameters 03-00 to 03-04 are Only Required for External Run/stop (Two wire control mode).

※Note 2: For External Run /Stop control, set parameters in the following order:

1. 00-02 **Or** 00-03
2. 00-04
3. 03-00 to 03-04 as required. Not required for Three wire control mode.

00-04 = 0 (Forward/stop-reverse/stop)

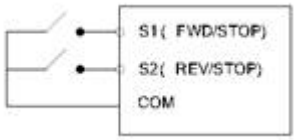

Two external switches are required: one for Forward direction and the other for Reverse.
Switch type: Two position, maintained type (this is two wire mode).

1. Forward (Run/ Stop) Switch
   Select one of the multifunction inputs [**S1 to S5]** and set the relevant parameter 03-00 to 03-04=0
   0 = Forward - Run /Stop mode.

2. Reverse (Run /Stop) Switch
   Select one of the multifunction inputs [**S1 to S5**] and set the relevant parameter 03-00 to 03-04=1
   1 = Reverse - Run /Stop mode.

00-04 =1 (Run/stop-forward/reverse)

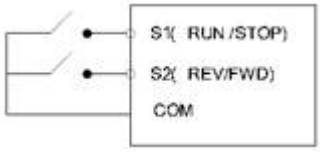

Two external switches are required.
Switch type: Two position, maintained type (this is two wire mode).

1. Run/Stop switch
   Select one of the multifunction inputs [**S1 to S5**] and set the relevant parameter 03-00 to 03-04=0
   0 = Run/Stop mode.

2. Forward/Reverse Switch
   Select one of the multifunction inputs [**S1 to S5**] and set the relevant parameter 03-00 to 03-04=1
   1 = Forward / Reverse direction selection.
   Switch in OFF position = Forward direction
   Switch in ON position = Revers direction.

00-04 = 2 (Three Wire Control mode Run/Stop)
In this mode Two Separate momentary Push buttons are used for Start and stop functions.
In this mode parameter group 3 for S1 to S5 are not effective. S1,S2 & S3 are allocated automatically.

※Note 1: For S1 to initiate the Run command. Push button connected to S2 must be connected by a normally closed type contact (NC).

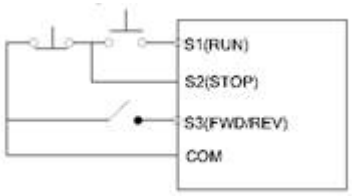

00- 05	Main Frequency Command Source Selection
00- 06	Alternative Frequency Command Source Selection
Range	【0】: UP/DOWN of Keypad 【1】: Potentiometer on Keypad 【2】: External AVI Analog Signal Input 【3】: External ACI Analog Signal Input 【4】: External Up/Down Frequency Control 【5】: Communication setting Frequency 【6】: PID Output frequency

- When 00-06 =[6], frequency command source is output of the PID.

00- 07	Main and Alternative Frequency Command Modes
Range	【0】: Main Or Alternative Frequency. 【1】: Main frequency + Alternative Frequency

- When 00-07=【0】, the frequency source is set by the **Main frequency** parameter 00-05 (Default) or by the **Alternative frequency** parameter 00-06.

Use any of the external terminals S1 to S5 and set the relevant parameter 03-00 to 03-04 =【13】to switch from **main** to **Alternativ**e source.

- When 00 - 07 =【1】The Frequency command will be the SUM of Main & alternative frequencies.

  I.e:
  Main frequency setting=10Hz
  Alternative frequency setting= 5Hz
  If 00-07=0, frequency setting will be 10Hz OR 5 Hz
  If 00-07=1, frequency setting will be 10Hz + 5 Hz = 15Hz

00- 08	Communication Frequency Command
Range	【0.00~599.00】Hz

- This parameter can be used to read the set frequency in communication mode
- This parameter is only effective in the communication mode.

00- 09	Frequency Command save on power down (Communication mode)
Range	【0】: disable 【1】: enable

- 00-09=【0】 Keypad frequency is saved.
- 00-09=【1】 **Frequency set by communication is saved**.

00-10	Initial Frequency Selection
Range	【0】: By Current Freq Command 【1】: By Zero Freq Command 【2】: By 00-11
00-11	Initial Frequency Setpoint
Range	【0.00~599.00】Hz

- This parameter is only effective in keypad mode..

- When 00-10=【0】,the initial frequency will be current frequency.
- When 00-10=【1】,the initial frequency will be 0.
- When 00-10=【2】,the initial frequency will be as set by parameter 00-11.

00-12	Frequency Upper limit
Range	【0.01~599.00】Hz
00-13	Frequency Lower limit
Range	【0.00~598.99】Hz

- When 00-13 = 0 and frequency command is 0Hz, inverter output stays in zero speed.
- When 00-13 > 0 and frequency command ≤ setting in 00-13, inverter output speed = setting in 00-13

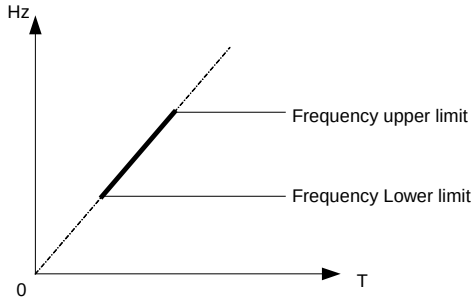

00-14	Acceleration time 1
Range	【0.1~3600.0】 s
00-15	Deceleration time 1
Range	【0.1~3600.0】s
00-16	Acceleration time 2
Range	【0.1~3600.0】s
00-17	Deceleration time 2
Range	【0.1~3600.0】s

- Preset Acceleration and Deceleration times by above parameters are the time taken for the output frequency to ramp up or ramp down between the Upper and the lower V/F frequency limits.

- Actual acceleration and deceleration time is calculated as follows：

V/F mode:

$$\text{Actual acceleration time}=\frac{(00\text{-}14)\text{x}(\text{set frequency-the minimum starting frequency})}{\text{V/F Maximum output frequency}}$$

$$\text{Actual deceleration time}=\frac{(00\text{-}15)\text{x}(\text{set frequency-the minimum starting frequency})}{\text{V/F Maximum output frequency}}$$

SLV mode:

$$\text{Actual acceleration time}=\frac{(00\text{-}14)\text{x}(\text{set frequency-the minimum starting frequency})}{\text{Motor rated frequency}}$$

$$\text{Actual deceleration time}=\frac{(00\text{-}15)\text{x}(\text{set frequency-the minimum starting frequency})}{\text{Motor rated frequency}}$$

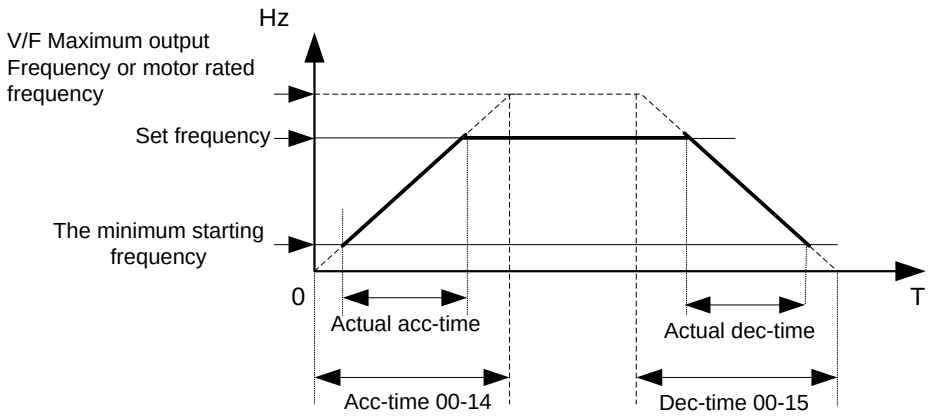

V/F Maximum output frequency is for VF curve, which can be checked from table when VF curve is fixed. Maximum output frequency is 01-02 when VF curve is customized, or motor rated frequency 02-06

00-18	Jog Frequency
Range	【1.00~25.00】Hz
00-19	Jog Acceleration Time
Range	【0.1~25.5】s
00-20	Jog Deceleration Time
Range	【0.1~25.5】s

- The JOG function is operational by using the multi-function input terminals S1 to S5 and setting the relevant parameters 03-00~03-04 to 【6】JOG FWD or【7】JOG REV. Refer to parameter group 3.

01-V/F command group	
01- 00	**Volts/Hz Patterns (V/F)**
Range	**【1~7】**

- Set 01-00 to one of the following preset V/f selections 【1~6】according to the required application.
- Parameters 01-02~01-09 Can not be modified (read only).
- Six fixed V/f patterns are shown below.【1~3】for 50 Hz systems and 【4~6】for 60 Hz.

TYPE	50Hz		60Hz	
Function	**01-00**	**V/F pattern**	**01-00**	**V/F pattern**
General Use	**=【1】**	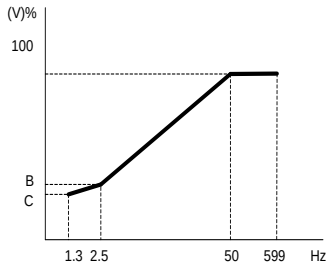	**=【4】**	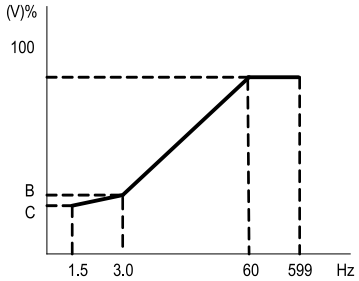
High start torque	**=【2】**	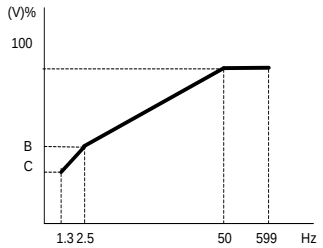	**=【5】**	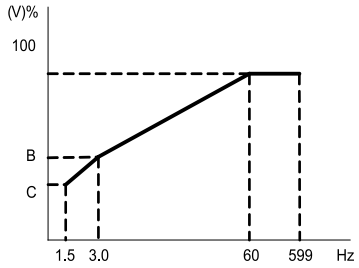
Decreasing torque	**=【3】**	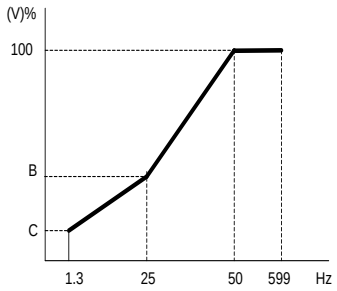	**=【6】**	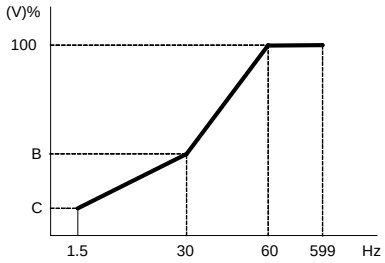

- (V) 100% is the maximum output voltage. B, C point preset % settings will be as table below:

01- 00	Sizes 1/2		Sizes 3/4	
	B(Xb)	C(Xc)	B(Xb)	C(Xc)
1/4	10%	8%	6.8%	3.4%
2/5	12%	9.5%	6.9%	3.5%
3/6	25%	7.7%	40%	3.4%

- Setting 01-00 =[7] provides a flexible V/F curve which can be selected by experienced users by setting parameters (01-02~01-09).

01- 01	V/f Maximum voltage
Range	200:【170.0~264.0】V 400:【323.0~528.0】V
01- 02	Maximum Frequency (base frequency)
Range	【0.2 ~ 599.00】Hz
01- 03	Maximum Frequency Voltage Ratio
Range	【0.0 ~ 100.0】%
01- 04	Medium Frequency 2
Range	【0.1 ~ 599.00】Hz
01- 05	Medium Frequency Voltage Ratio 2
Range	【0.0 ~ 100.0】%
01- 06	Medium Frequency 1
Range	【0.1 ~ 599.00】Hz
01- 07	Medium Frequency Voltage Ratio 1
Range	【0.0 ~ 100.0】%
01- 08	Minimum Frequency
Range	【0.1 ~ 599.00】Hz
01- 09	Minimum Frequency Voltage Ratio
Range	【0.0 ~ 100.0】%

- Max output frequency depends on parameter 01-00 , for 01-00=【7】It can be set by parameter 01-02.
- For 01-00 ≠【7】, the maximum output frequency depends on parameter 00-12, frequency upper limit.

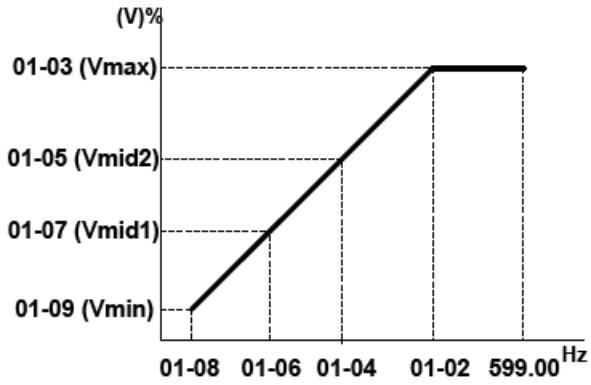

01-10	Volts/Hz Curve Modification (Torque Boost)
Range	【0 ~ 10.0】%

- Inverter output V / F curve settings for points B, C can be adjusted by parameter 01-10 to improve the output torque.
- Calculation of B, C point voltage: B point voltage = Xb × maximum output voltage, C point voltage = Xc × maximum output voltage (Xb, Xc see 01-00). When 01-10 = 0, the torque improvement is disabled.

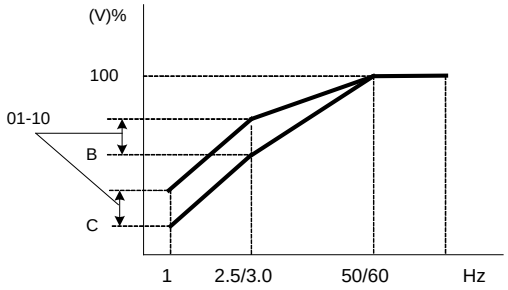

01-11	V/F start Frequency
Range	【0.00 ~10.00】Hz

VF Start Frequency is for occasion where Start Frequency higher than zero Hz is needed.

01-12	No-load oscillation suppression gain
Range	【0.0~200.0】%

- In V/F mode , If in no load condition current oscillation occurs causing motor vibration then adjust parameter 01-12 to reduce this effect.
- Adjustment can be done in steps of 5 to 10%.
-

01-13	Motor Hunting Prevention Coefficient
Range	【1~8192】
01-14	Motor Hunting Prevention Gain
Range	【0~100】%
01-15	Motor Hunting Prevention Limit
Range	【0.0~100.0】%

- In V/F mode, parameters 01-13,01-14 & 01-15 are used to prevent motor hunting by adjusting the V/F output voltage level.
- 01-13 Sets the hunting prevention response time constant (in msecs).
- 01-14 Sets the Gain of the hunting prevention.
- 01-15 Sets the hunting prevention voltage limit.
- Diagram below shows the Parameter relationships.

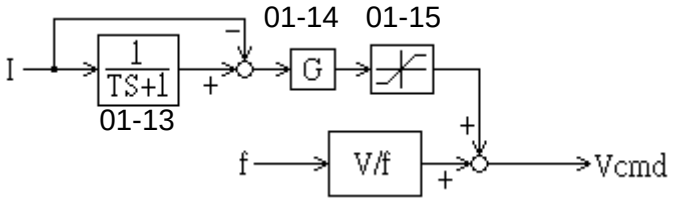

01- 16	Auto-Torque Compensation Filter Coefficient
Range	【0.1 ~ 1000.0】ms
01- 17	Auto-torque Compensation Gain
Range	【0~ 100】%
01- 18	Auto-torque Compensation Frequency
Range	【1.30 ~ 5.00】Hz

- Auto-torque Compensation function is effective in V/F mode. It can be used to correct insufficient torque at low frequencies (below 5 hz)
- Parameters 01-16 to 01-18 are effective after carrying out Auto tune function in SLV mode.
- Setting 01-17=0 Disables the auto torque compensation function.

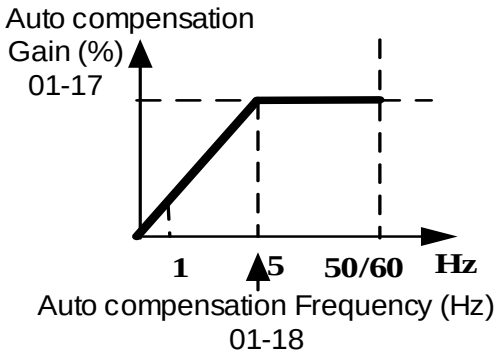
Auto compensation
Gain (%)
01-17
1
5
50/60
Hz
Auto compensation Frequency (Hz)
01-18

02- Motor parameter group

02- 00	Motor no load current. (For slip compensation calculation)
Range	----
02- 01	Motor Rated Current

※Note: Please set the value according to motor's nameplate.

Range	----
02- 02	Slip Compensation Gain. (V/f mode only)
Range	【0.0 ~ 100.0】(%)

- When the load causes the actual motor speed to be reduced below the speed set by inverter output frequency (Slip) , parameter 02-02 Slip compensation can be used to correct the speed.

Slip compensation calculation in V/F mode:

$$\text{Slip compensation boost}=\frac{\text{Output Current-(02-00)}}{\text{(02-01)-(02-00)}}\text{x(02-02)xRate motor slip}$$

Motor slip = Motor synchronous speed- Motor Rated Speed

$$\text{(02-02)approximate Value}=\frac{\text{Motor synchronization speed-Rated speed}}{\text{Motor synchronization speed}}$$

$$\text{Example: 4 poles, 60Hz induction motor synchronization speed}=\frac{120}{4}\text{ x 60=1800(RPM)}$$

※Note: Parameters 02- 00/02- 01 have to be set according to the specific motor data and in relation to the Inverter rating model parameter (13- 00).

02- 03	Motor Rated Speed
Range	----

- Slide compensation limit, inverter will calculate the motor slide according to 02-03. V/F slide compensation will not be higher than 02-03.

※Note: Please set the value according to motor's nameplate.

02- 04	Motor Rated Voltage
Range	----

- In order to prevent the output voltage of inverter is too high. The output voltage value will not be higher than 02-04. 02-04 can be changed during operation.

※Note: Please set the value according to motor's nameplate.

02- 05	Motor Rated Power
Range	【0~22.0】kW
02- 06	Motor Rated Frequency
Range	【0~599.0】Hz

02- 07	Motor Auto Tuning
Range	【0】: Disable 【1】: Static auto tuning
02- 08	Stator Resistor Gain
Range	----
02- 09	Rotor Resistor Gain
Range	----

Auto tune function in SLV mode. 00-00=【1】

- Set motor parameters 02-01 and 02-03～02-06，then set 02-07 to【1] to start the auto tune function.
- During the Auto tune function the display will show AT and show END briefly when auto tune is completed then the display will return to the frequency display.

- Following an auto tune the motor test data are stored in parameters 02-08&02-09 then the setting in 02-07 will automatically reset to 0.

Notes:

- Carry out Auto tune again whenever replacing the motor.
- Auto tune function is not possible for applications with multi-motor connected to one inverter.
- Auto tune can be used on motors of equivalent size to the inverter or one size smaller(or one size bigger). Just need to set the motor parameter and set 02-07 to be 1.
- Parameters 02-00 ~ 02-06 are available both for V/F & SLV mode (Except parameter 02-02 which is for V/f).

02- 13	SLV Slip Compensation Gain
Range	【0~200】%
02- 14	SLV Torque Compensation Gain
Range	【0~200】%

SLV Slip compensation

- When the load causes the actual motor speed to be reduced below the speed set by inverter output frequency (Slip), parameter 02-13 SLV Slip compensation can be used to correct the speed. Adjust 02-13 in steps of 5 to 10%.

SLV Torque compensation

- When the output torque is insufficient due to load demand, it can be adjusted by this parameter. Torque producing current is adjusted to compensate for the reduced torque.
- 02-13、02-14 compensation is based on the load current. The unit of 02-13 is based on rated slip frequency; The unit of 02-14 is based on rated torque difference.
- The adjustment for 01-14 can be increased or decreased every time about 5% to 10%.

02- 15	Low Frequency Torque Gain
Range	【0~100】%

- In SLV mode parameter 02-15 can be used to reduce the effect of PWM dead zone which helps to increase the output torque. Output torque is increased by compensation.

PWM dead zone at low frequencies below 10Hz causes torque reduction.

02- 16	SLV Without Load Slip Compensation Gain
Range	【0~200】%
02- 17	SLV With Load Slip Compensation Gain
Range	【0~200】%

- 1. When output current <= 02-00 (Motor current without load)
  Slip compensation gain :
  = [SLV slip compensation gain(02-13）]* [Normal Duty slip compensation gain (02-16）]
- 2. When output current > 02-00 (Motor current with load)
  Slip compensation gain:
  = [SLV slip compensation gain(02-13）] * Slip compensation gain 1
  (According to the diagram below）]

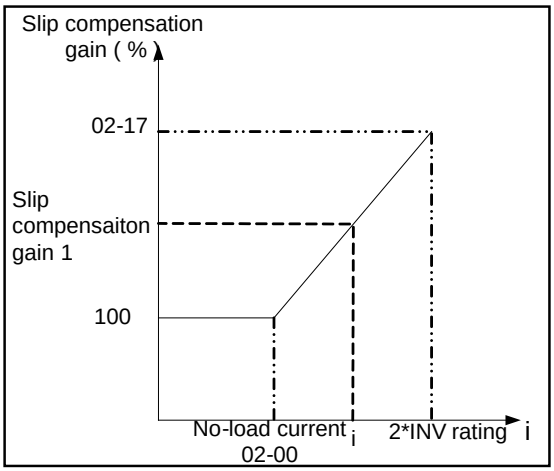

03- External digital inputs & Relay Output functions

03- 00	Multifunction Input Term. S1
03- 01	Multifunction Input Term. S2
03- 02	Multifunction Input Term. S3
03- 03	Multifunction Input Term. S4
03- 04	Multifunction Input Term. S5
Range	【0】:Forward/Stop Command----------(Parameters 00- 02/00-03=1 & 00-04) 【1】:Reverse/Stop Command----------(Parameters 00-02/00-03=1 & 00-04) 【2】:Preset Speed 1 (5- 02)---------- (Parameter Group5) 【3】:Preset Speed 2 (5- 03)----------(Parameter Group5) 【4】:Preset Speed 4 (5- 05) ----------(Parameter Group5) 【6】:JOG Forward Command----------(Parameters 00-18~00-20) 【7】:JOG Reverse Command---------- (Parameters 00-18~00-20) 【8】:Up Command---------- (Parameters 00- 05/00- 06=4& 03-06/03-07) 【9】:Down Command---------- (Parameters 00- 05/00- 06=4& 03-06/03-07) 【10】: 2nd Acc/Dec times 【11】: Disable Acc/Dec 【12】: Main/ Alternative run source Select----------(Parameters 00- 02/00- 03) 【13】: Main/Alternative Frequency Command Select----(Parameters 00- 05/00- 06) 【14】: Rapid Stop (controlled deceleration stop) 【15】: Base Block (Coast to stop) 【16】: Disable PID Function.----------(Parameter Goup10) 【17】: Reset 【18】: Enable Auto Run Mode----------(Parameter Group 6)

Various example settings and descriptions for Parameters 03-00 to 03-04 are noted in the following pages seconds from 1 to 13.

1) For setting parameters 03- 00~03- 04 to【0, 1】External Run/Stop Control, refer to 00- 04.

2-wire method. Mode 1.

Example: FWD/STOP and REV/STOP from two inputs (S1&S2)

Set 00- 04=【0】, S1: 03- 00=【0】(FWD/STOP**) , S2: 03- 01=【1】(**REV/STOP**);**

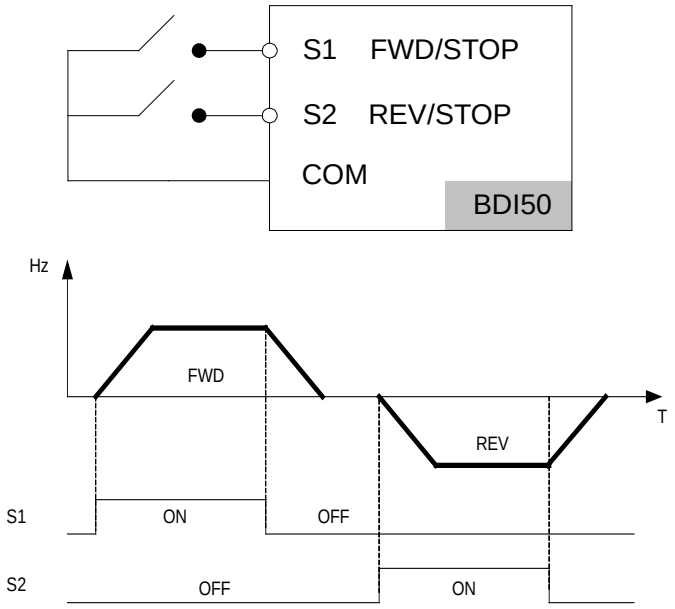

※ **Note:** If both forward and reverse commands are ON, it will be treated as a STOP.

2-wire method. Mode 2.

Example: RUN/STOP and REV/FWD from two inputs (S1&S2)

Set 00- 04=【1】; S1: 03- 00=【0】(RUN/STOP**); S2:03- 01=【1】(**REV/FWD**);**

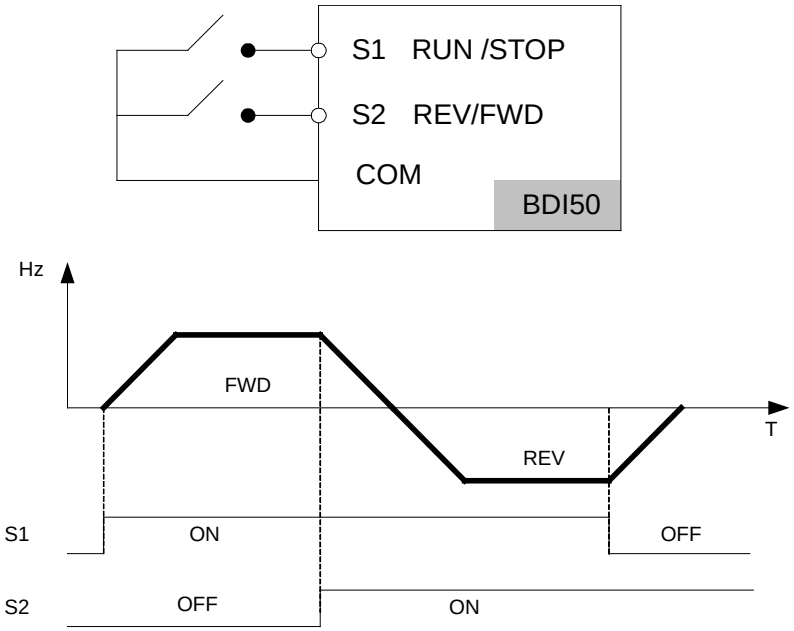

3-wire method.

Example: Two separate push buttons for RUN & STOP and a two position switch for FWD/ REV

Set 00- 04 =2.(3 wire control mode), then terminals S1, S2 and S3 are dedicated to this function and Preset selections for parameters 03-00, 03-01 and 03-02.are not relevant.

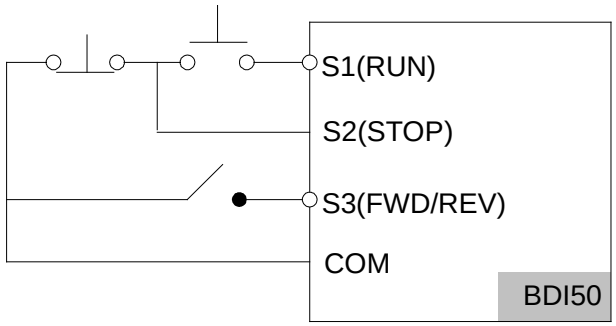

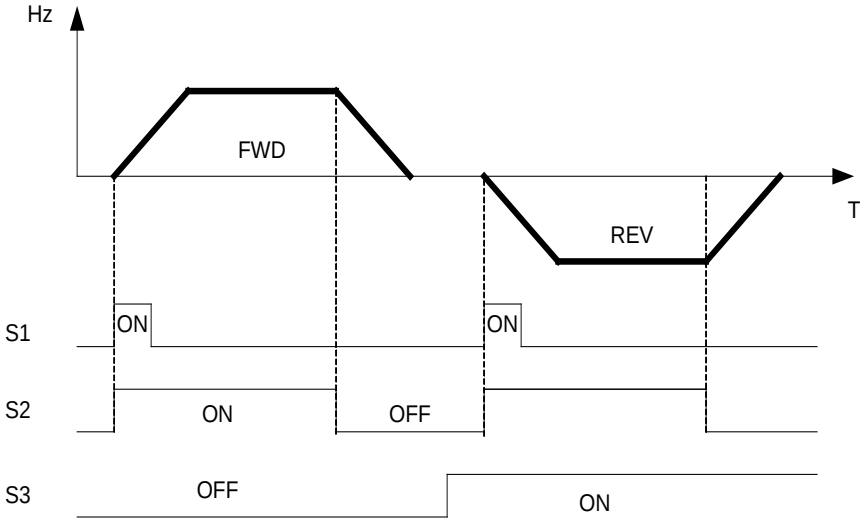

2) Parameters 03- 00~03- 04=【4, 3, 2】Preset speed selections.

Combination of any three terminals from S1~ S5 can be used to select preset speeds 0 to 7 according to the table below.

Preset speed 0-7 and the related acceleration/decelerating times should be set in parameter group 5.

For example timing diagram refer to Group 5 description.

Preset speed	Function setting and state of any three (A,B,C) of terminal S1~S5			Frequency	Acc-time	Dec-time
	terminal A=4	terminal B =3	terminal C =2			
speed 0	OFF	OFF	OFF	05- 01	05- 17	05-18
speed 1	OFF	OFF	ON	05- 02	05- 19	05-20
speed 2	OFF	ON	OFF	05- 03	05- 21	05-22
speed 3	OFF	ON	ON	05- 04	05- 23	05-24
speed 4	ON	OFF	OFF	05- 05	05- 25	05-26
speed 5	ON	OFF	ON	05- 06	05- 27	05-28
speed 6	ON	ON	OFF	05- 07	05- 29	05-30
speed 7	ON	ON	ON	05- 08	05- 31	05-32

3) 03- 00~03- 04=【6 ,7】 Forward/ Reverse JOG

When an input terminal is set to function【6】and is turned on, inverter will work in jog forward mode.

When an input terminal is set to function【7】and is turned on, inverter will work in jog reverse mode.

Note: If jog forward and jog reverse function is enabled at the same time, inverter will enter stop mode.

4) 03- 00~03- 04=【8, 9】UP/DOWN

When an input terminal is set to function【8】and is turned on ,frequency command is increased according to the UP/DOWN , increment/decrement step set in parameter 03-06.

If the input is kept on continuously, the frequency command increases accordingly until the upper frequency limit is reached.

When an input terminal is set to function【9】and is turned on , frequency command decreases according to the UP/DOWN increment/decrement step set in parameter 03-06.

If the input is kept on continuously, the frequency command decreases accordingly and in relation to settings for parameter 03-06 and 3-07 until Zero speed is reached.

Refer to group 3 parameter description.

5) 03- 00~03- 04=【10】 2nd Acc/Dec time

When an input terminal is set to function【10】and is turned on ,the actual acceleration and deceleration time will be according to the time for 2nd Accel/Decel set in parameters 00-16 and 00-17.

if the input is turned off, the acceleration and deceleration times will be according to the default accel/decal 1 set in parameters 00-14 & 00-15.

6) 03- 00~03- 04=【11】 Disable Acc/Dec function

When an input terminal is set to function【11】and is turned on, acceleration and deceleration function will be disabled and the frequency at the time is maintained. (constant speed mode)

If the input is turned off, acceleration and deceleration function is enabled again.

For an example see the following diagram.

Accel/Decel & Enable/Disable timing diagram using terminal S1 and parameter 03-00 = 11.

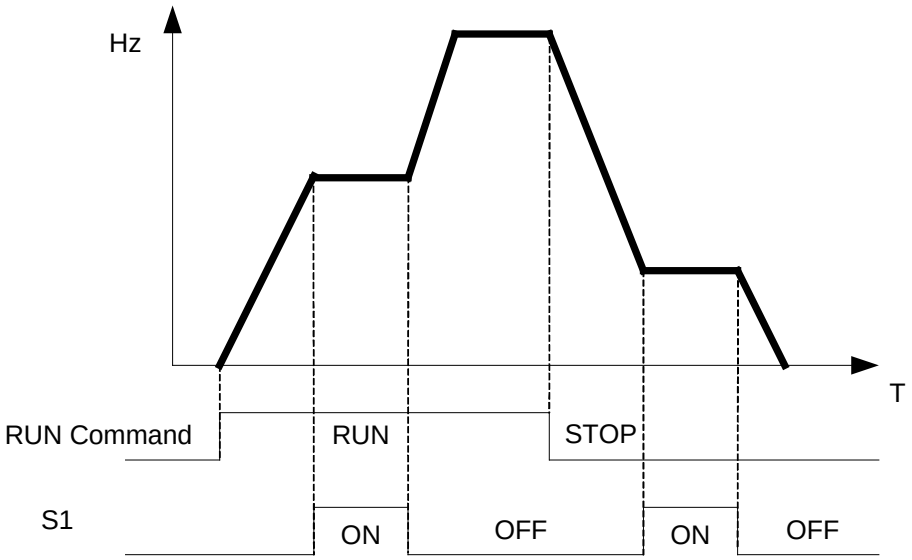

7) 03- 00~03- 04=【12】Main/ Alternative run source select.

When an input terminal is set to function【12】and is turned on, the run command source is according to parameter 00-03(Alternative Run source).If the Input is off it will be according to 00-02 (Main run source).

8) 03- 00~03- 04=【13】Main/ Alternative Frequency source Select

When an input terminal is set to function【13】and is turned on, the frequency source is according to parameter 00-06(Alternative Frequency source).If the Input is off it will be according to 00-05 (Main Frequency source).

9) 03- 00~03- 04=【14】Rapid Stop (controlled deceleration stop)

When DI is on, motor decelerates to stop.
When turning off DI (remove ES), BDI50 won't run again. BDI50 runs again only after giving Run command again.

10) 03- 00~03- 04=【15】Base Block (Coast to stop)

When DI is on, motor free runs to stop.
When turning off DI (remove BB), BDI50 will start running from 5Hz below the set frequency, to 5Hz above the set frequency, and then back to the set frequency.

11) 03- 00~03- 04=【16】Disable PID Function.

When an input terminal is set to function【16】and is turned on, PID functions is disabled, if it is turned off , PID function is enabled again.

12) 03- 00~03- 04=【17】Reset

When a failure that can be manually reset occurs, turn on a terminal with function 【17】, the failure will be reset. (Same function as the Reset button on keypad).

13) 03- 00~03- 04=【18】Auto _ Run Mode

When an input terminal is set to function【18】, the programmable auto- sequencer function is enabled, Refer to description of parameter group 6.

03- 06	Up/Down frequency step
Range	【0.00~5.00】Hz

Example：S1：03- 00=【8】Up frequency command, S2：03- 01=【9】Down frequency command, 03- 06=【△】Hz

Mode1：If UP or DOWN input terminals are turned on for less than 2 seconds, for every On operation frequency changes by △Hz.

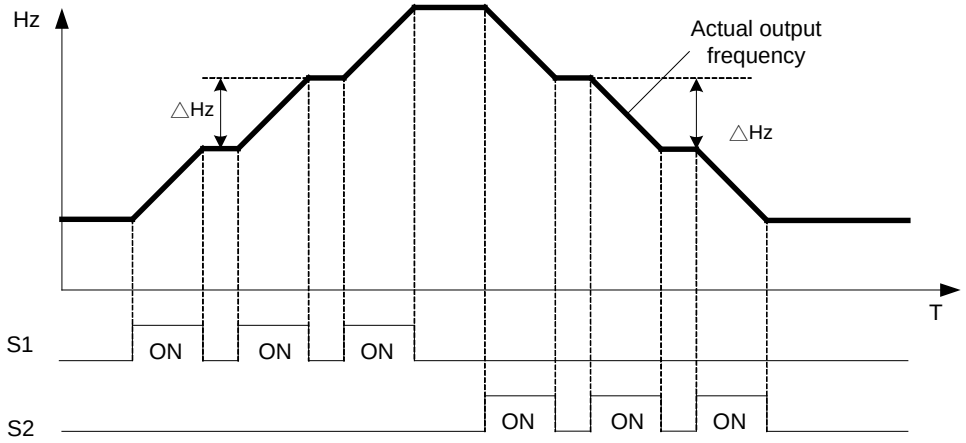

Mode 2：If UP or DOWN input terminals are turned on for more than 2Seconds, the original UP/DOWN mode is restored Output frequency Ramps up or down as long as the input is kept ON.

As shown in the diagram below.

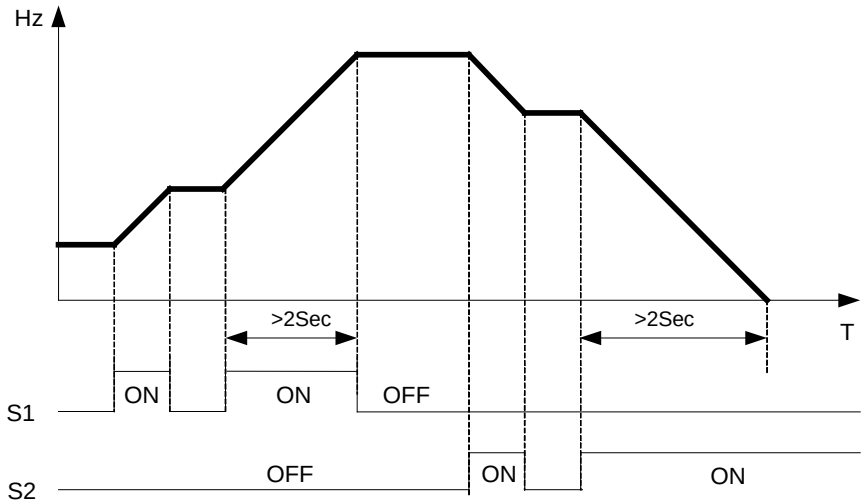

03- 07	Up/Down keep Frequency status after a stop command
Range	**【0】: After a stop command in Up/Down mode, the preset frequency is held as the inverter stops, and the UP/Down function is disabled.** **【1】: After a stop command in Up/Down mode, the preset frequency is reset to 0 Hz as the inverter stops.** **【2】: After a stop command in Up/Down mode, the preset frequency is held as the inverter stops, and the UP/Down function remains enabled.**

- 03 - 07 =【0】,【2】When run signal is removed (Stop Command), the output frequency is stored in parameter 05-01(Key pad Frequency).
- 03 - 07 =【0】 In stop mode since frequency can not be increased or decreased from

Up/Down terminals then keypad can be used to change the frequency by modifying parameter 05-01.

- 03 - 07 =【1】In Up/down frequency mode inverter will ramp up from 0Hz on Run command
  and Ramp down to 0 Hz on stop command.

03- 08	Multifunction terminals S1~S5 scan time
Range	【1~200】 2ms

- Multifunction input terminal On/Off periods will be scanned for the number of cycles according to the set value in parameter 03-08. If the signal status for On or off period is less than the set period it will be treated as noise.
- Scan period unit is 1ms.
- Use this parameter if unstable input signal is expected, however setting long scan time periods results in slower response times.

03- 09	s1~s5 Input type selection NO & NC	
Range	【xxxx0】:S1 NO	【xxxx1】:S1 NC
	【xxx0x】:S2 NO	【xxx1x】:S2 NC
	【xx0xx】:S3 NO	【xx1xx】:S3 NC
	【x0xxx】:S4 NO	【x1xxx】:S4 NC
	【0xxxx】:S5 NO	【1xxxx】:S5 NC

- (NO) Normally open, (NC) Normally closed. Select as required.
- For selecting Normally Open (NO) or Normally Closed(NC) set the relevant digit in parameter 03-09 to 0 or 1 as required.
- Set Parameter 03-09 first before you use the Parameters 00-02/00-03=1 to set the inverter run mode to External multifunction inputs.

03-11	Multifunction Output Relay RY1 functions. (Terminals RB, RA)
Range	【0】:Run
	【1】:Fault
	【2】:Setting Frequency Reached ----------(refer to 03-14)
	【3】:Frequency Reached (3-13±3-14) ----------(refer to 03-13/03-14)
	【4】:Output Frequency Detection 1 (> 03-13) ----------(refer to 03-13)
	【5】:Output Frequency Detection 2 (< 03-13) ----------(refer to 03-13)
	【6】:Auto-Restart
	【7】:Momentary AC Power Loss----------(refer to 07-00)
	【8】:Rapid Stop (Decelerate to Stop)
	【9】:Base Block
	【10】:Motor Overload Protection (OL1)
	【11】:Drive Overload Protection (OL2)
	【12】:Reserved
	【13】:Output Current Reached ----------(refer to 03-15/03-16)

	【14】:Brake Control----------(refer to **03-17/03-18)** 【15】:PID Feedback Disconnection Detection --------(refer to **10-11/10-13)**
03-13	**Frequency Detection Level**
Range	**【0.00~599.00】 Hz**
03-14	**Frequency Detection Width**
Range	**【0.00~30.00】 Hz**

Output relay RY1. function descriptions:

1) 03-11 =【0】. RY1 will be ON with Run signal.

2) 03-11 =【1】. RY1 will be ON with inverter Faults.

3) 03-11 =【2】. RY1 will be ON when Output Frequency reached Setting Frequency.

When Output Freq. = Setting Frequency - Frequency Detection Width (03-14),
Relay Output will be ON.

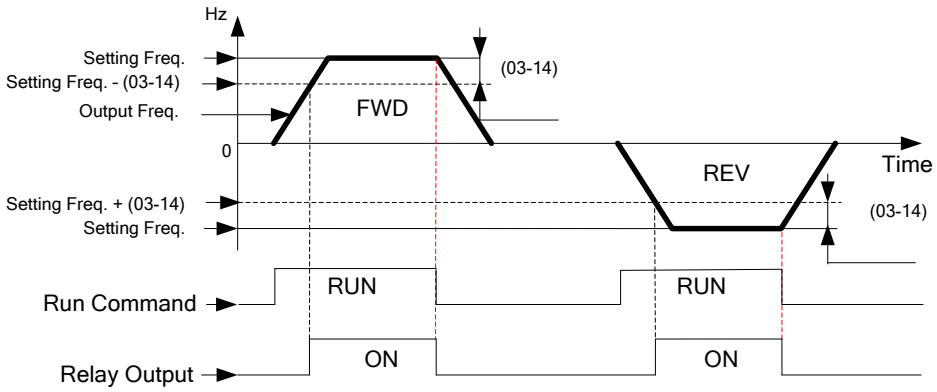

Example：Setting Freq. =30, and Frequency Detection Width (03-14) =5,
Relay will be ON when output frequency reached 25Hz to 30Hz and Run Command is on (Allowable tolerance ±0.01).

4) 03-11=【3】 RY1 will be ON when Setting Freq. and Output Frequency reached (03-13 +/- 03-14).

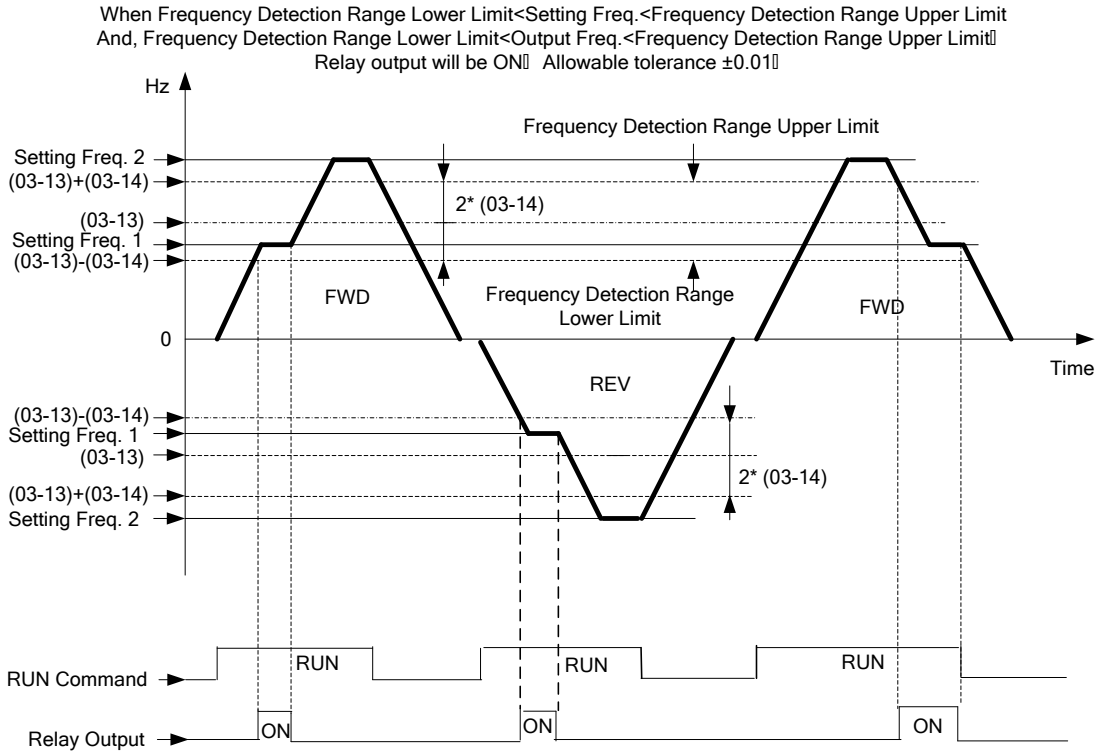

Example: Frequency Detection Level (03-13) =30, and Frequency Detection Width (03-14) =5 cause Frequency Detection Range upper limit = 35, and Frequency Detection Range lower limit = 25. So RY1 will be on when Setting Freq. and Output Freq. are both under these limits; on the other hand, RY1 will be off when Setting Freq. and Output Freq. are not under these limits either.

5) 03-11=【4】. RY1 will be on while Output Freq. > Frequency Detection Level (03-13).

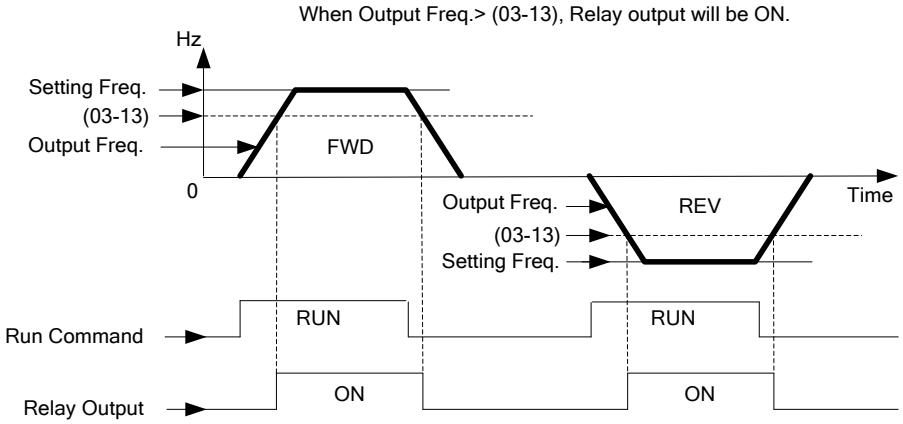

6) 03-11=【5】. RY1 will be on while Output Freq. < Frequency Detection Level (03-13).

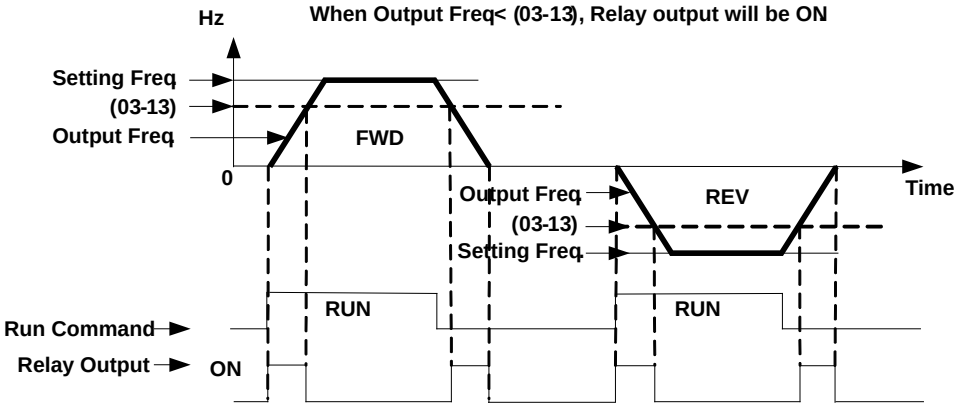

03-15	Output Current Detection Level
Range	【0.1~15.0】 A
03-16	Output Current Detection Period
Range	【0.1~10.0】s

- **03-11=【13】**.RY1 will be on as soon as the output current value > Output current detection level (03-15).
- 03-15: Setting range (0.1~15.0 Amps) as required according to the rated motor current.
- 03-16: Setting range (0.1~10.0) unit: seconds.

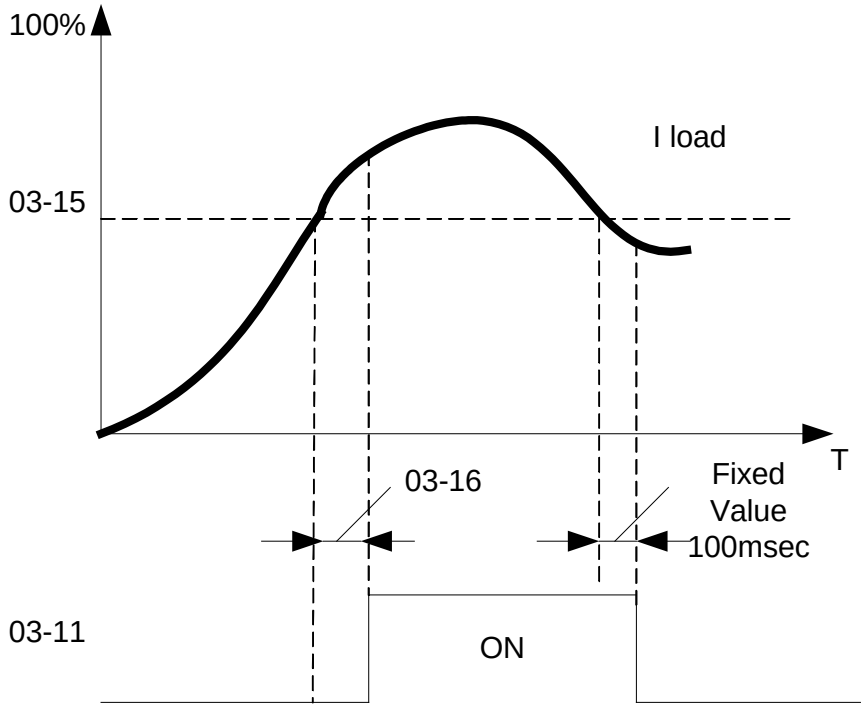

03-17	Brake Release Level
Range	【0.00~20.00】 Hz
03-18	Brake Engage Level
Range	【0.00~20.00】 Hz

- If 03-11 =**【14】**
- In accelerating mode. RY1 will be ON as soon as the actual output frequency reaches the

external Brake release level set in parameter 03-17.

- In decelerating mode, RY1 will be OFF as soon as the actual output frequency reaches the external Brake engage level set in parameter 03-18.

Timing diagram for 03-17 < 03-18 is shown below:

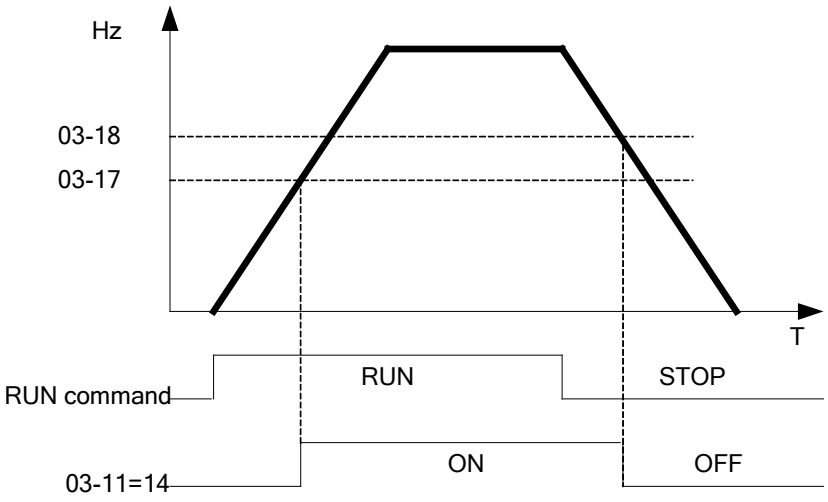

Timing diagram for 03-17 > 03-18 is shown below:

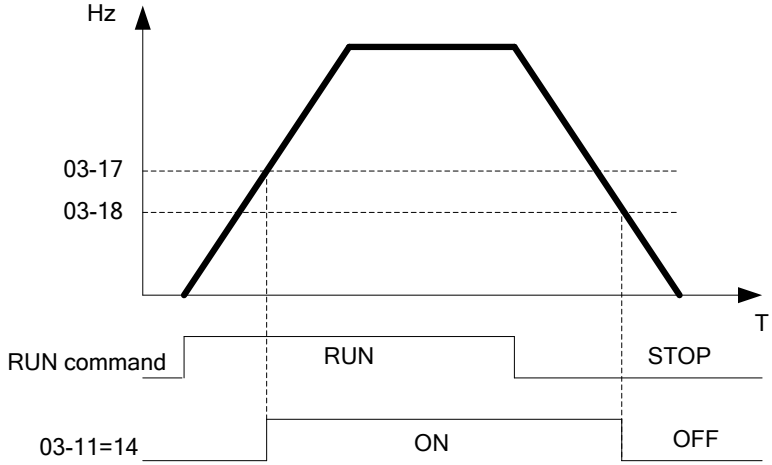

03- 19	Relay Output Status type
Range	【0】:A (Normally open) 【1】:B (Normally close)

03- 20	Brake Transistor ON Level
Range	230V:【240.0~400.0】VDC 400V:【500.0~800.0】VDC
03- 21	**Brake Transistor OFF Level**
Range	230V:【240.0~400.0】VDC 400V:【500.0~800.0】VDC

When DC bus voltage >03-20 Excess voltage will be applied to the external brake resistor.
When DC bus voltage <= 03-21 Braking transistor will be switched off.

Do not set 03-21 > 03-20, or display will show Err2, which means parameter setting error.

04- External analog signal input / output functions

04- 00	Analog Voltage & Current input s lections	
Range	AVI	ACI
	【0】:0~10V	0~20mA
	【1】:0~10V	4~20mA
	【2】:2~10V	0~20mA
	【3】:2~10V	4~20mA

➢ **Analog Input Scaling formulas:**

■ AVI (0~10V), ACI (0~20mA)

$$\text{AVI}(0\sim10\text{V}):\ F(\text{Hz}) = \frac{V(v)}{10(v)} \times (00-12);$$

$$\text{ACI}(0\sim20\text{mA}):\ F(\text{Hz}) = \frac{I(\text{mA})}{20(\text{mA})} \times (00-12)$$

■ AVI (2~10V), ACI (4～20mA)

$$\text{AVI}(2\sim10\text{V}):\ F(\text{Hz}) = \frac{V-2(v)}{10-2(v)} \times (00-12), V>=2;$$

$$\text{ACI}(4\sim20\text{mA}):\ F(\text{Hz}) = \frac{I-4(\text{mA})}{20-4(\text{mA})} \times (00-12), I>=4;$$

04- 01	AVI signal verification Scan Time
Range	【1~200】2ms
04- 02	AVI Gain
Range	【0 ~ 1000】%
04- 03	AVI Bias
Range	【0~ 100】%
04- 04	AVI Bias Selection
Range	【0】: Positive 【1】: Negative
04- 05	AVI Slope
Range	【0】: Positive 【1】: Negative
04- 06	ACI signal verification Scan Time
Range	【1~200】2ms
04- 07	ACIGain
Range	【0 ~ 1000】%
04- 08	ACI Bias
Range	【0 ~ 100】%
04- 09	ACI Bias Selection
Range	【0】: Positive 【1】: Negative
04-10	ACI Slope
Range	【0】: Positive 【1】: Negative

➢ Set 04- 01 and 04- 06 for Analog signal verification.
Inverter reads the average values of A/D signal once per (04- 01/04- 06 x 2ms).

Set scan intervals according to the application and with consideration for signal instability or interference effects on the signal by external sources. Long scan times will result in slower response time.

AVI. Analog Voltage input scaling examples by adjusting Gain, Bias & Slope parameters (04-02~04-05).

(1) Positive Bias type (04-04= 0) and effects of modifying Bias amount by parameter 04-03 and Slope type with parameter 04-05 are shown in Fig 1&2.

Figure 1.

	04- 02	04- 03	04- 04	04- 05
A	100%	50%	0	0
B	100%	0%	0	0

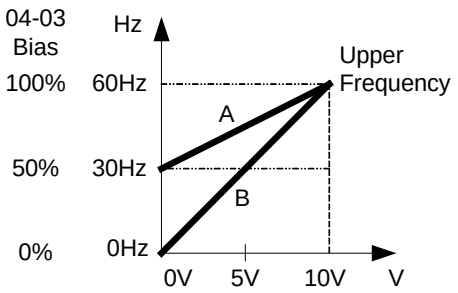

Figure 2.

	04- 02	04- 03	04- 04	04- 05
C	100%	50%	0	1
D	100%	0%	0	1

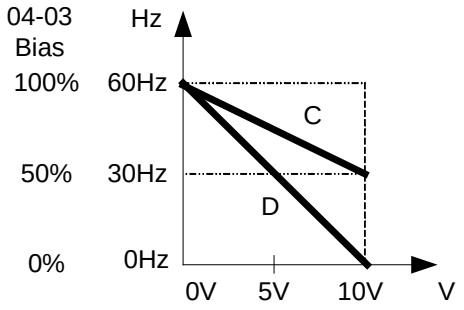

Negative Bias type and effects of modifying Bias amount by parameter 04-03 and Slope type with parameter 04-05 are shown in Fig 3&4.

Figure3:

	04- 02	04- 03	04- 04	04- 05
E	100%	20%	1	0

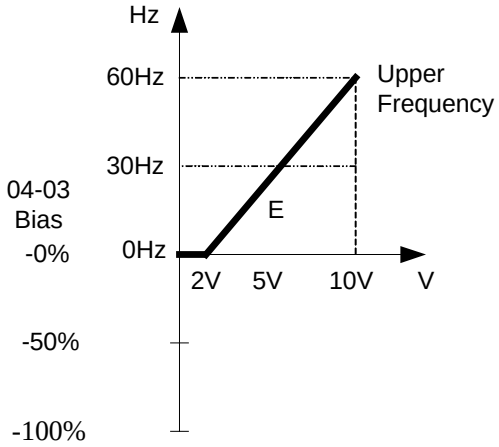

Figure4:

	04- 02	04- 03	04- 04	04- 05
F	100%	50%	1	1

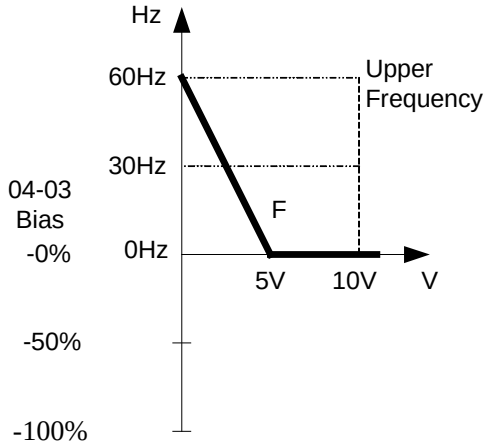

(2) Offset bias set to 0% (04-03) and effect of modifying Analog Gain (04-02), Bias type (04-04) and slope type(04-05) are shown in shown Fig 5&6.

Figure 5

	04- 02	04- 03	04- 04	04- 05
A'	50%	0%	0/1	0
B'	200%	0%	0/1	0

Figure 6

	04- 02	04- 03	04- 04	04- 05
C'	50%	0%	0/1	1
D'	200%	0%	0/1	1

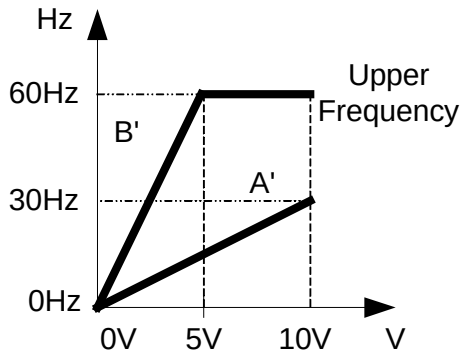

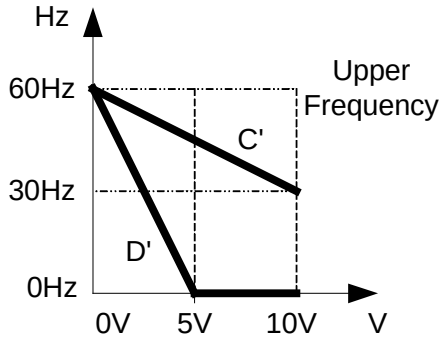

(3) Various other examples of analog input scaling and modification are shown in following figures 7,8,9 & 10.

Figure7

	04- 02	04- 03	04- 04	04- 05
a	**50%**	**50%**	**0**	**0**
b	**200%**	**50%**	**0**	**0**

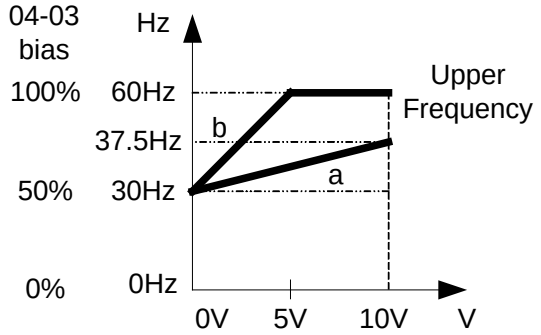

Figure 8

	04- 02	04- 03	04- 04	04- 05
c	**50%**	**50%**	**0**	**1**
d	**200%**	**50%**	**0**	**1**

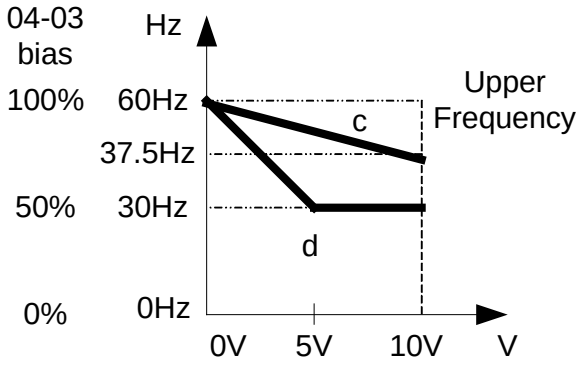

Figure 9

	04- 02	04- 03	04- 04	04- 05
e	**50%**	**20%**	**1**	**0**
f	**200%**	**20%**	**1**	**0**

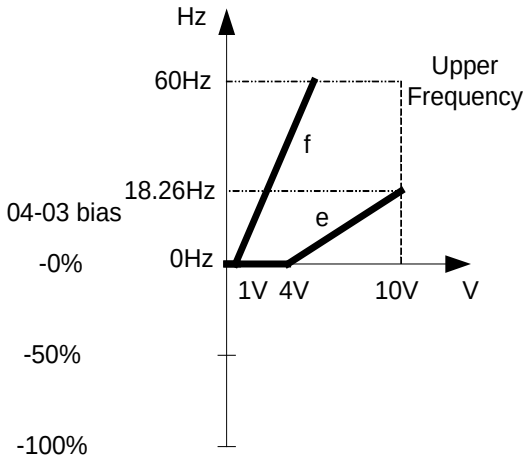

Figure 10

	04- 02	04- 03	04- 04	04- 05
g	**50%**	**50%**	**1**	**1**
h	**200%**	**0%**	**0**	**1**

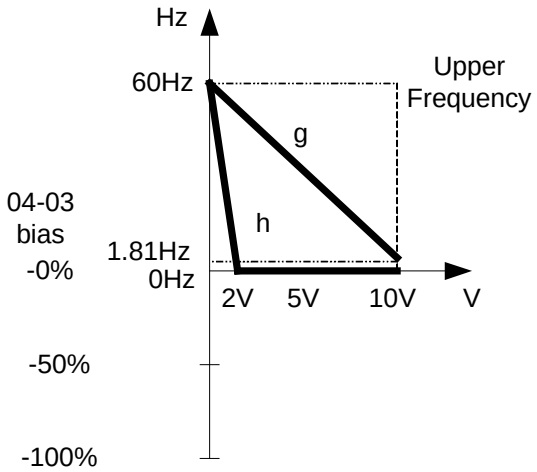

04-11	Analog Output (AO) function selection.
Range	【0】:Output frequency 【1】:Frequency Setting 【2】:Output voltage 【3】:DC Bus Voltage 【4】:Output current

Example: Set 04-11 required according to the following table.

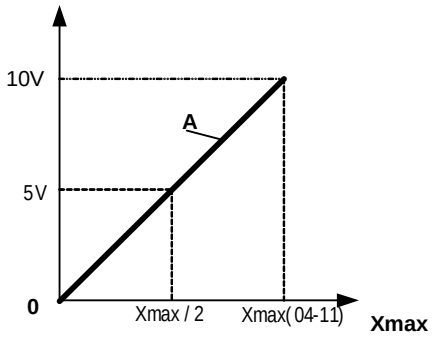

04-11	A	Xmax
【0】	Output frequency	upper frequency limit
【1】	Frequency Setting	upper frequency limit
【2】	Output voltage	Motor Rated Voltage
【3】	DC Bus Voltage	220V：0~400V 380V：0~800V
【4】	Output current	2 times rated current of inverter

04-12	AO Gain
Range	【0 ~ 1000】%
04-13	AO Bias
Range	【0 ~ 100】%
04-14	AO Bias Selection
Range	【0】: Positive 【1】: Negative
04-15	AO Slope
Range	【0】: Positive 【1】: Negative

- Select the Analog output type for the multifunction analog output on terminal (TM2) as required by parameter 04-11. Output format is 0-10V dc.
  The output voltage level can be scaled and modified by parameters 04-12 to 04-15 If necessary.

- The modification format will be same as the examples shown previously for Analog Voltage Input (AVI) parameters 4-02 to 4-05.

Note: the max output voltage is 10V due to the hardware of the circuit.
Use external devices that require a maximum of 10V dc signal.

05- Preset Frequency Selections.

05- 00	Preset Speed Control mode Selection
Range	【0】:Common Accel / Decel. 【1】: Individual Accel/Decel for each preset speed 0-7.

05- 01	Preset Speed 0 (Keypad Freq)
05- 02	Preset Speed 1
05- 03	Preset Speed 2
05- 04	Preset Speed 3
05- 05	Preset Speed 4
05- 06	Preset Speed 5
05- 07	Preset Speed 6
05- 08	Preset Speed 7
Range	【0.00 ~ 599.00】 Hz
05-17	Preset Speed 0 Acceleration time
05-18	Preset Speed 0 Deceleration time
05-19	Preset Speed 1 Acceleration time
05- 20	Preset Speed 1 Deceleration time
05- 21	Preset Speed 2 Acceleration time
05- 22	Preset Speed 2 Deceleration time
05- 23	Preset Speed 3 Acceleration time
05- 24	Preset Speed 3 Deceleration time
05- 25	Preset Speed 4 Acceleration time
05- 26	Preset Speed 4 Deceleration time
05- 27	Preset Speed 5 Acceleration time
05- 28	Preset Speed 5 Deceleration time
05- 29	Preset Speed 6 Acceleration time
05- 30	Preset Speed 6 Deceleration time
05- 31	Preset Speed 7 Acceleration time
05- 32	Preset Speed 7 Deceleration time
Range	【0.1 ~ 3600.0】s

- When 05- 00 =【0】Accel /Decl 1 or 2 set by parameters 00-14/00-15 or 00-16/00-17 apply to all speeds.
- When 05- 00 =【1】Individual Accel/Decel apply to each preset speed 0-7. Parameters 05-17 to 05-32.
- Formula for calculating acceleration and deceleration time:

V/F mode:

$$\text{Actual Acc time} = \frac{\text{Time of Accel 1 or 2 x Preset Frequency}}{\text{V/F Max Frequency}}$$

$$\text{Actual Dec time} = \frac{\text{Time of Decel 1 or 2 x Preset Frequency}}{\text{V/F Max Frequency}}$$

SLV mode:

$$\text{Actual Acc time} = \frac{\text{Time of Accel 1 or 2 x Preset Frequency}}{\text{Motor rated output frequency}}$$

$$\text{Actual Dec time} = \frac{\text{Time of Decel 1 or 2 x Preset Frequency}}{\text{Motor rated output frequency}}$$

- V/F Maximum output frequency = parameter 01-02 when programmable V/F is selected by 01-00=【7】. Motor rated output frequency is set by parameter 02-06.
- V/F Maximum output frequency = 50.00 hz or 60.00 hz when preset V/F patterns are selected. 01- 00≠【7】.

Examples is in V/F mode:

01-00 ≠【7】, 01-02 =【50】Hz, 05-02=【10】Hz (preset speed 1),
05-19 =【5】s (Accel time), 05-20=【20】s (Decel time)

$$(Preset\ speed\ 1\ Actual\ Accel\ time) = \frac{(05\text{-}19) \times (10\,[Hz])}{(01\text{-}02)} = 1\,[s]$$

$$(Preset\ speed\ 1\ Actual\ Decel\ time) = \frac{(05\text{-}20) \times (10\,[Hz])}{(01\text{-}02)} = 4\ [s]$$

- **Multi speed run/stop cycles with Individual Accel/Decel times. 05-00=【1】**
- Two modes are shown below:
- Mode1 = On/Off run command
- Mode2= Continuous run command

Mode1 Example: 00- 02=【1】(External Run/Stop Control).

00- 04=【1】(Operation Mode：Run/stop-forward/reverse).

S1: 03- 00=【0】(RUN/STOP);

S2: 03- 01=【1】(Forward/Reverse);

S3: 03- 02=【2】(Preset speed 1);

S4: 03- 03=【3】(Preset speed 2);

S5: 03- 04=【4】(Preset speed 4);

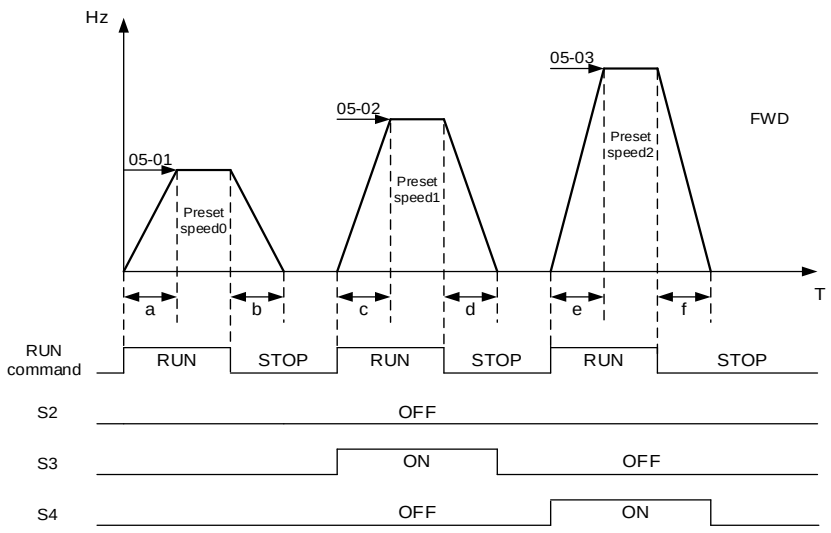

When the run command is On/Off, acceleration and deceleration times for each cycle can be calculated as below: time unit is in seconds.

$a=\frac{(05-17)\times(05-01)}{01-02}$, $b=\frac{(05-18)\times(05-01)}{01-02}$, $c=\frac{(05-19)\times(05-02)}{01-02}$, $d=\frac{(05-20)\times(05-02)}{01-02}$ ……

- **Mode2 Example.** Continuous run command.
- Set S1 for Continuous Run
- Set S2 For Forward /Revise direction selection
- Set multi function terminals S3,S4 & S5 for setting three different preset speeds

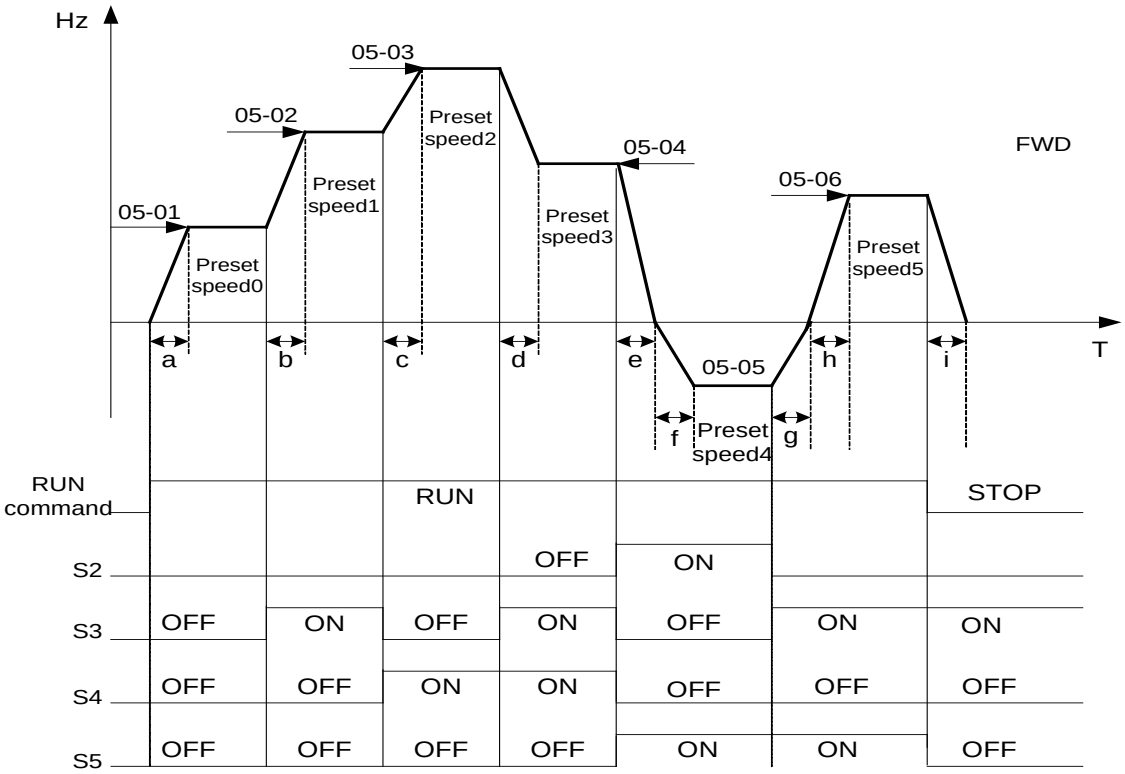

When the run command is continuous, acceleration and deceleration times for each segment can be calculated as below:

Ex: $a=\frac{(05\text{-}17)x(05\text{-}01)}{01\text{-}02}$, $b=\frac{(05\text{-}19)x[(05\text{-}02)\text{-}(05\text{-}01)]}{01\text{-}02}$

$c=\frac{(05\text{-}21)x[(05\text{-}03)\text{-}(05\text{-}02)]}{01\text{-}02}$, $d=\frac{(05\text{-}24)x[(05\text{-}03)\text{-}(05\text{-}04)]}{01\text{-}02}$

$e=\frac{(05\text{-}26)x(05\text{-}05)}{01\text{-}02}$, $f=\frac{(05\text{-}28)x(05\text{-}05)}{01\text{-}02}$, $g=\frac{(05\text{-}27)x(05\text{-}05)}{01\text{-}02}$

$h=\frac{(05\text{-}29)x(05\text{-}05)}{01\text{-}02}$, $i=\frac{(05\text{-}32)x(05\text{-}05)}{01\text{-}02}$ .....Unit(sec)

06- Auto Run(Auto Sequencer) function

06- 00	Auto Run(sequencer) mode selection
Range	【0】:Disabled 【1】:Single cycle (Continues to run from the unfinished step if restarted). 【2】:Periodic cycle. (Continues to run from the unfinished step if restarted). 【3】:Single cycle, then holds the speed of final step to run. (Continues to run from the unfinished step if restarted). 【4】:Single cycle. (Starts a new cycle if restarted). 【5】:Periodic cycle. (Starts a new cycle if restarted). 【6】:Single cycle, then hold the speed of final step to run. (Starts a new cycle if restarted).

Frequency of the step 0 is set by parameter 05-01 keypad Frequency.	
06- 01	Auto _ Run Mode Frequency Command 1
06- 02	Auto _ Run Mode Frequency Command 2
06- 03	Auto _ Run Mode Frequency Command 3
06- 04	Auto _ Run Mode Frequency Command 4
06- 05	Auto _ Run Mode Frequency Command 5
06- 06	Auto _ Run Mode Frequency Command 6
06- 07	Auto _ Run Mode Frequency Command 7
Range	【0.00 ~ 599.00】Hz

06- 16	Auto_ Run Mode Running Time Setting0
06- 17	Auto_ Run Mode Running Time Setting1
06- 18	Auto_ Run Mode Running Time Setting2
06- 19	Auto_ Run Mode Running Time Setting3
06- 20	Auto_ Run Mode Running Time Setting4
06- 21	Auto_ Run Mode Running Time Setting5
06- 22	Auto_ Run Mode Running Time Setting6
06- 23	Auto_ Run Mode Running Time Setting7
Range	【0.00 ~ 3600.0】s

06- 32	Auto_ Run Mode Running Direction0
06- 33	Auto_ Run Mode Running Direction1
06- 34	Auto_ Run Mode Running Direction2
06- 35	Auto_ Run Mode Running Direction3
06- 36	Auto_ Run Mode Running Direction4
06- 37	Auto_ Run Mode Running Direction5
06- 38	Auto_ Run Mode Running Direction6
06- 39	Auto_ Run Mode Running Direction7
Range	【0】: STOP 【1】: Forward 【2】: Reverse

- Auto Run sequencer mode has to be enabled by using one of the multifunctional inputs S1 to S5 and setting the relevant parameter 03-00 to 03-04 to selection【18】.
- Various Auto Run (sequencer) modes can be selected by parameter (06-00) as listed above.
- 7 Auto Run (sequencer) modes can be selected by parameters (06-01~06-39)
- Auto Run frequency commands1 to 7 are set with Parameters (06-01 ~ 06-07),
- Sequence run times are set with parameters (06-17 ~ 06-23)

- FWD/REV Direction for each sequence can be set with parameters (06-33 ~ 06-39).
- Auto sequence 0, frequency is set from keypad by parameter 05-01, sequence run time and direction are set by parameters 06-16 and 06-32.

Auto RUN (Auto Sequencer) examples are shown in the following pages:

Example 1. Single Cycle (06- 00=1,4)
The inverter will run for a single full cycle based on the specified number of sequences, then it will stop. In this example 4 sequences are set, three in forward direction and one in Reverse.

Auto Run Mode. 06- 00=【1】or【4】,

Frequency 05- 01=【15】Hz, 06- 01=【30】Hz, 06- 02=【50】Hz, 06- 03=【20】Hz

Sequence Run Time 06-16=【20】s, 06-17 =【25】s, 06-18=【30】s, 06-19=【40】s,

Direction 06-32=【1】FWD, 06-33 =【1】FWD, 06-34=【1】(FWD), 06-35=【2】(REV)

Unused Sequence Parameters 06-04~ 06-07=【0】Hz , 06-20~06-23=【0】s , 06-36~06-39=【0】

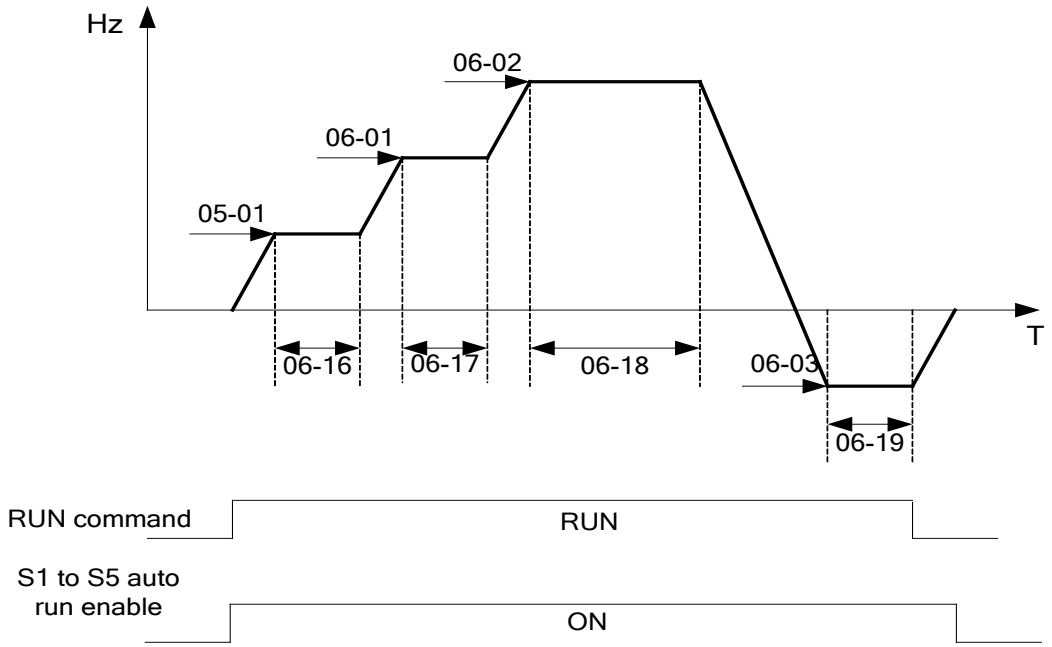

Example 2. Periodic cycle Run.

Mode: 06- 00=【2】or【5】

The inverter will repeat the same cycle periodically.
All other Parameters are set same as Example 1. shown above.

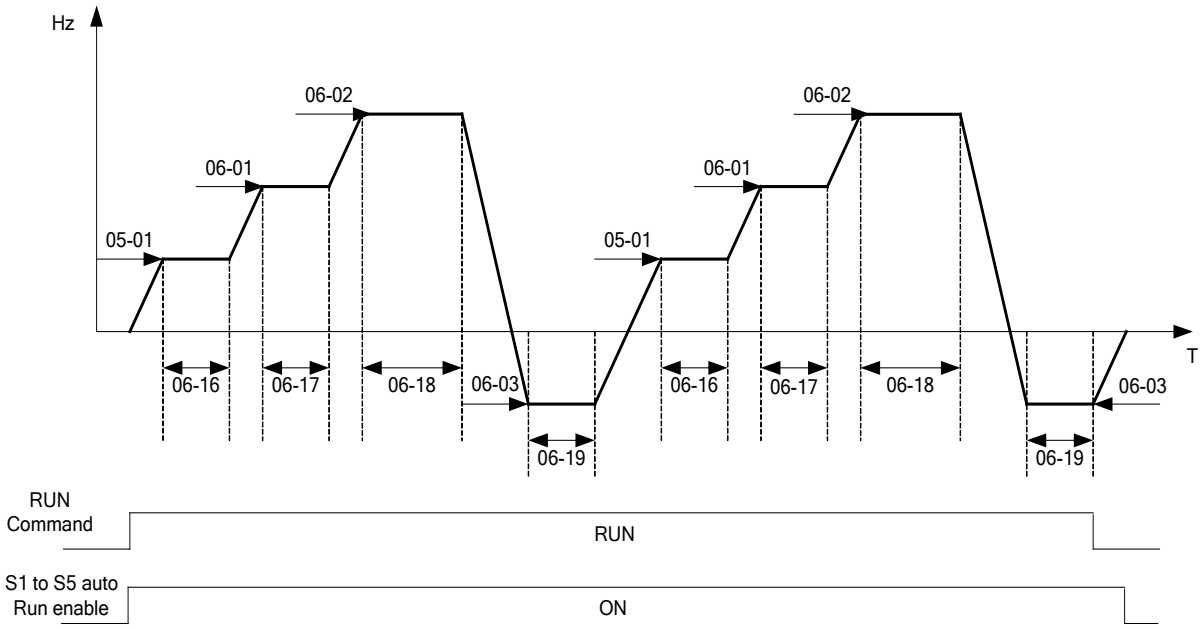

Example 3. Auto_Run Mode for Single Cycle 06-00=【3 or 6】

The speed of final step will be held to run.

Auto Run Mode. 06- 00 =【3】or【6】

Frequency 05- 01 =【15】Hz, 06- 01=【30】Hz, 06- 02=【50】Hz, 06- 07=【20】Hz,

Sequence Run Time 06-16 =【20】s, 06-17=【25】s, 06-18=【30】s, 06-23=【40】s,

Direction 06-32 =【1】FWD 06-33=【1】, 06-34 =【1】, 06-39=【1】,

Unused Sequence Parameters 06-03~06- 06=【0】Hz, 06-19~06-22=【0】s, 06-35~06-38 =【0】

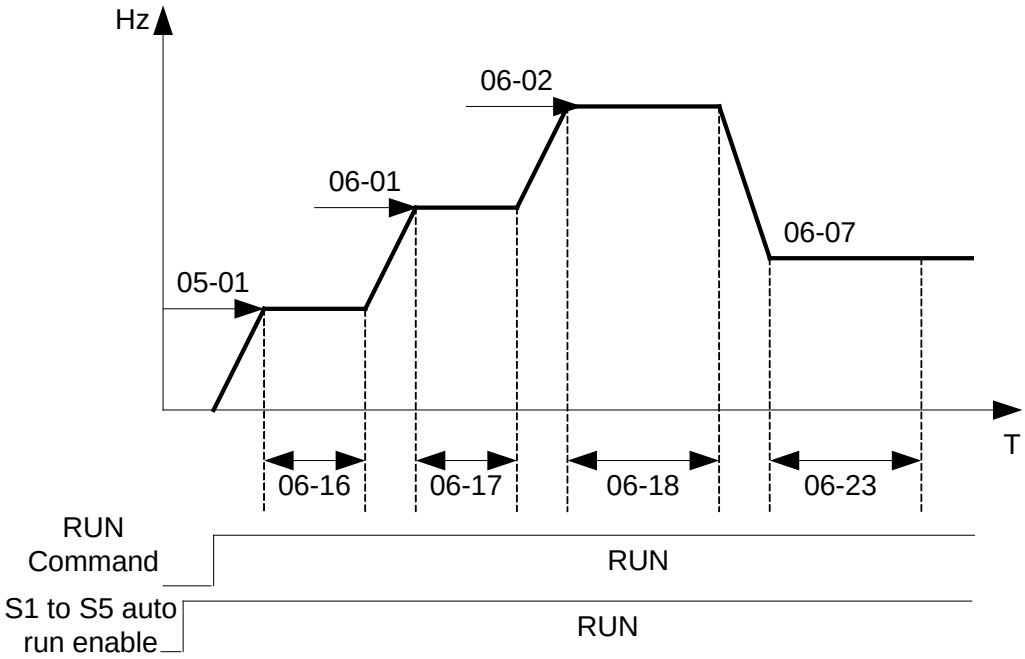

Example 4&5 .

Auto Run Mode 06-00=【1~3】. After a restart continues to run from the unfinished step.

Auto Run Mode 06-00=【4~6】. After a restart, it will begin a new cycle.

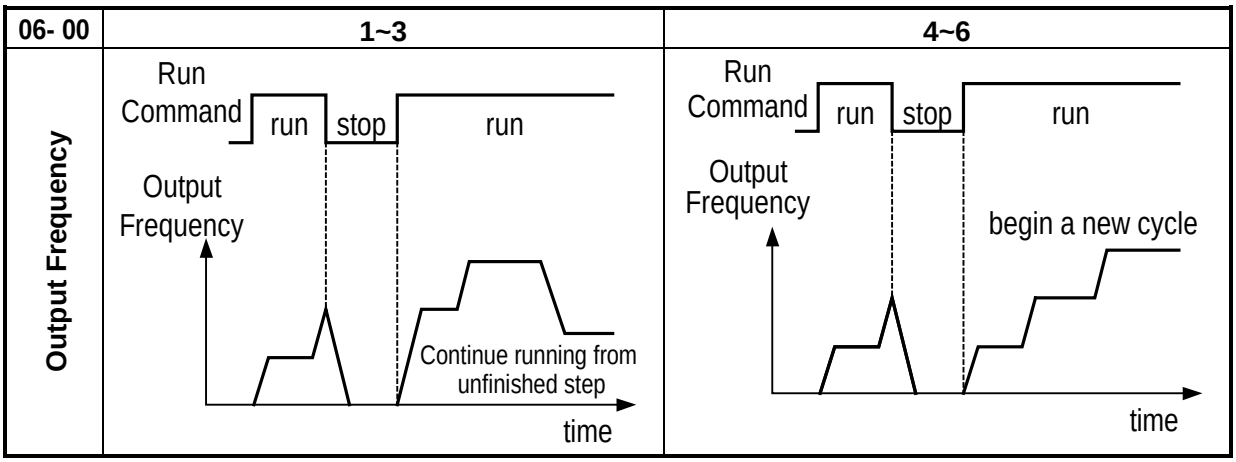

- ACC/DEC time in Auto run mode will be according to the setting of 00-14/00-15 or 00-16/00-17.
- For Auto sequence 0.The run frequency will be according to keypad frequency set by parameter 05-01.Parameters 06-16 and 06-32 are used to set the sequence Run time and Run direction.

07- Start/Stop command setup	
07- 00	**Momentary power loss and restart**
Range	**【0】:Momentary Power Loss and Restart disable** **【1】:Momentary power loss and restart enable**

- If the input power supply due to sudden increase in supply demand by other equipment results in voltage drops below the under voltage level, the inverter will stop its output at once.
- When 07-00 =【0】.On power loss, the inverter will not start.
- When 07-00 =【1】.Aafter a momentary power loss, inverter will restart with the same frequency before power loss, and there is no limitation on number of restarts.
- On power loss, as long as the inverter CPU power is not completely lost, the momentary power loss restart will be effective, restart will be according to setting of parameters 00-02 & 07-04 and status of External run switch.

Caution: After any power loss if the Run mode is set to External by parameter 00-02=1 and if Direct start on power up is also selected by parameter 07-04=0, please note that the inverter will run on resumption of power.

To ensure safety of operators and to avoid any damages to the machinery, all necessary safety measure must be considered, including disconnection of power to the inverter.

07- 01	**Auto Restart Delay Time**
Range	**【0.0~800.0】s**
07- 02	**Number of Auto Restart Attempts**
Range	**【0~10】**

- 07- 02=【0】: The inverter will not auto restart after trips due to fault.
- 07- 02>【0】, 07- 01=【0】.After a trip due to fault the inverter will run with the same frequency before power loss, and restarts after an internal delay of 0.5 seconds.
- 07- 02>【0】, 07- 01>【0】, After a fault trip the inverter will run with the same frequency before power loss, and restart with a delay according the preset in parameter 07-01.
- ***Note: Auto restart after a fault will not function while DC injection braking or decelerating to stop***
- ***Note: this function is available just after a fault/error. This parameter cannot be used after momentary power loss.***

07- 03	**Reset Mode Setting**
Range	**【0】:Enable Reset Only when Run Command is Off** **【1】:Enable Reset when Run Command is On or Off**

- 07-03=0 Once the inverter is detected a fault, please turn Run switch Off and then On again to perform reset, otherwise restarting will not be possible.

07- 04	**Direct Running on Power Up**
Range	**【0】:Enable Direct running after power up** **【1】:Disable Direct running after power up**
07- 05	**Delay-ON Timer (Seconds)**
Range	**【1.0~300.0】s**

- When direct run on power up is selected by 07-04=0 and the inverter is set to external run by (00-02/00-03=1), if the run switch is ON as power is applied, the inverter will auto start.

It is recommend that the power is turned off and the run switch is also off to avoid possibility of injury to operators and damage to machines as the power is reapplied.

Note: If this mode is required all safety measures must be considered including warning labels.

- When direct run on power up is disabled by 07-04=1and if the inverter is set to external run by (00-02/00-03=1), if the run switch is ON as power is applied, the inverter will not auto start and the display will flash with STP1. It will be necessary to turn OFF the run switch and then ON again to start normally.

07- 06	**DC Injection Brake Start Frequency (Hz)**
Range	**【0.10 ~ 10.00】Hz**
07- 07	**DC Injection Brake Level (%)**
Range	**【0~ 20】 % (Sizes 1/2)** Based on the 20% of maximum output voltage **【0~ 100】% (Sizes 3/4)** Based on invertor rated current

- Sizes 1/2 models, please refer the formula below.
  In V/F mode, the value is equal to 0~20% of max output voltage (01-01)
  In SLV mode, the value is equal to 0~20% of max output voltage (02-04)
- Sizes 3/4 models, the value is the equal to 0~100% of inverter rated output current.

07- 08	**DC Injection Brake Time (s)**
Range	**【0.0 ~ 25.5】s**

- 07- 08/07- 06 set the DC injection brake duration and the brake start frequency as shown below.

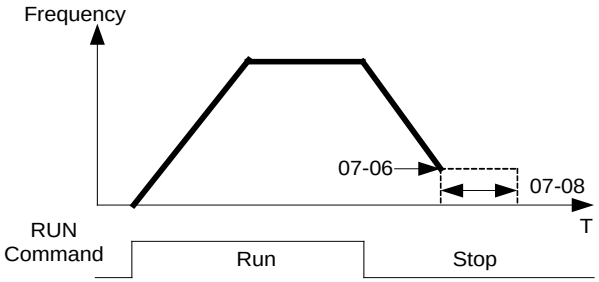

07- 09	**Stopping Method**
Range	**【0】:Deceleration to stop.** **【1】:Coast to stop.**

- 07- 09 = 【0】: after receiving stop command, the motor will decelerate to stop according to setting of 00-15, deceleration time 1.
- 07- 09 = 【1】: after receiving stop command, the motor will free-run (Coast) to stop.

08- Protection function group	
08- 00	**Trip Prevention Selection**
Range	**【xxxx0】:Enable Trip Prevention During Acceleration** **【xxxx1】:Disable Trip Prevention During Acceleration** **【xxx0x】:Enable Trip Prevention During Deceleration** **【xxx1x】:Disable Trip Prevention During Deceleration** **【xx0xx】:Enable Trip Prevention in Run Mode** **【xx1xx】:Disable Trip Prevention in Run Mode** **【x0xxx】:Enable over voltage Prevention in Run Mode** **【x1xxx】:Disable over voltage Prevention in Run Mode**

08- 01	**Trip Prevention Level During Acceleration**
Range	**【50 ~ 200】%**

- Trip prevention adjustment level during acceleration to prevent over current (OC-A) trips.
- If trip prevention during acceleration is enabled and an over current occurs due to the load, then the acceleration is interrupted until the over current level is dropped below the setting in 08-01 then the acceleration is resumed.

08- 02	**Trip Prevention Level During Deceleration**
Range	**【50 ~ 200】%**

- Trip prevention adjustment level during deceleration to prevent over Voltage (OV-C) trips.
- If trip prevention during deceleration is enabled and an over voltage occurs during stopping due to the load, then the deceleration is interrupted until the over voltage level is dropped below the setting in 08-02 then the deceleration is resumed.

08- 03	**Trip Prevention Level during continuous Run Mode**
Range	**【50 ~ 200】%**

- Trip prevention adjustment level during continuous Run to prevent over current (OC-C) trips.
- If trip prevention during continuous Run is enabled and an over current occurs due the load such as a sudden transient load, then the output frequency is reduced by decelerating to a lower speed until the over current level is dropped below the preset in 08-03, then the output frequency accelerates back to the normal running frequency.

08- 04	**Over voltage Prevention Level during Run Mode**
Range	**200:【350~390】VDC** **400:【700~780】VDC**

- Over voltage prevention level can be set by parameter 08-04 when necessary.
  When the DC bus voltage is higher than 08-04, inverter will keep running, the output frequency will be decreased once the DC bus voltage reduced. It's the over voltage prevention function, inverter will not appear any error message.
  (If the DC bus voltage higher than OV protection level, inverter will appear "OV" message).

08- 05	**Electronic Motor Overload Protection Operation Mode(OL1)**
Range	**xxxx0: Disable Electronic Motor Overload Protection** **xxxx1: Enable Electronic Motor Overload Protection** **xxx0x: Motor Overload Cold Start** **xxx1x: Motor Overload Hot Start** **xx0xx: Standard Motor** **xx1xx: Invertor Duty Motor (Force Vent)**

Electronic Motor Overload Protection OL1 (08-05)

- When more than one motor is connected to the inverter set the Overload protection level parameter 02-01 to the total current of all motors and provide external overload relay protection for each motor.
- When using normal power supply switch, motor overload protection 08-05=xxx1x (hot start protection curve) . Because whenever power is turned off, value of heat will return to default setting.
- 08-05 = xx0xx. (Standard motor Overload protection). For standard motors with integrated cooling fan when running at low speeds the heat dissipation is not very effective, consider Force vent cooling then set parameter 08-05=xx1xx for the correct overload protection.
- **08-05 = xxxx1:** Enable **e**lectronic overload protection for motor according to Setting in parameter 02-01(motor rated current).
- Refer to the curve below as an example for overload protection for a standard motor. (08-05=xx0xx)

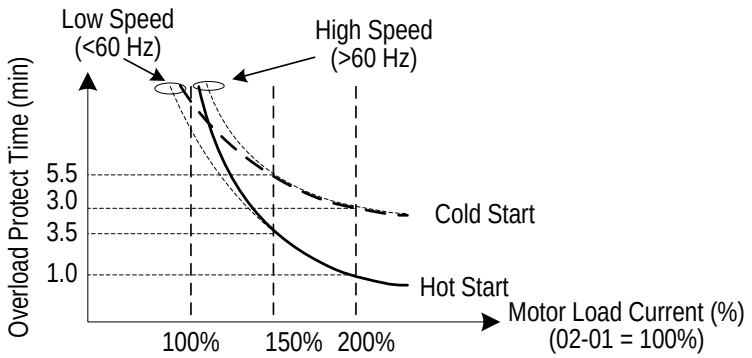

08- 06	Operation After Overload Protection is Activated
Range	**【0】:Coast-to-Stop After Overload Protection is Activated** **【1】:Drive Will Not Trip when Overload Protection is Activated (OL1)**

- 08- 06 = 【0】: On overload condition the inverter coast to stop as the thermal relay detects the overload and the display will flash OL1.To reset Press the 'Reset' key or use an external reset to continue to run.
- 08- 06 = 【1】: On overload condition the inverter continues to run, display flash with OL1, until the current falls below the overload level.

08- 07	OH over heat Protection
Range	**【0】:Auto (Depends on heat sink temp.)** **【1】:Operate while in RUN mode** **【2】:Always Run** **【3】:Disabled**

- **08- 07=【0】:** Cooling fan runs as the inverter detects temperature rise.
- **08- 07=【1】:** Cooling fan runs while the inverter is running.
- **08- 07=【2】:** Cooling fan runs continuously.
- **08- 07=【3】:** Cooling fan is Disabled**.**

08- 08	AVR function
Range	【0】:AVR function enable 【1】:AVR function disable 【2】:AVR function disable for stop 【3】:AVR function disable for Deceleration 【4】:AVR function disabled for stop & Deceleration from one speed to another speed. 【5】:when VDC>(360V/740V), AVR function is disabled for stop and Deceleration

- Automatic voltage regulator function provides a level of output voltage stability when there is input voltage instability. So when 08-08=0, Input voltage fluctuations will not effect the output voltage.
- 08-08=1. Input voltage fluctuations will cause fluctuations on output voltage.
- 08-08=2. AVR is disabled during stopping to avoid an increase in stopping time.
- 08-08=3. AVR is disabled only during deceleration from one speed to another speed. This will avoid longer than required deceleration time.
- 08-08=4, AVR function disabled for stop & Deceleration from one speed to another speed.
- 08-08=5, When VDC>360(200V series) or VDC>740V(400V series), AVR function is disabled for stop and deceleration.

08- 09	Input phase loss protection
Range	【0】:Disabled 【1】:Enabled

When 08-09=【1】:On phase loss warring message PF is displayed.

08- 10	PTC Motor Overheat Function
Range	【0】: Disable 【1】: Decelerate to stop 【2】: Coast to stop 【3】: Continue running, when **warning level** is reached. Coast to stop, when **protection level** is reached.
08- 11	PTC Signal Smoothing Time
Range	【0.00 ~ 10.00】s
08- 12	PTC Detection Time Delay
Range	【1 ~ 300】s
08- 13	PTC Protection Level
Range	【0.1 ~ 10.0】V
08- 14	PTC Detection Level Reset
Range	【0.1 ~ 10.0】V
08- 15	PTC Warning Level
Range	【0.1 ~ 10.0】V

- **Selection for motor overheat protection:**

PTC (Positive temperature coefficient) sensors are used in motor windings to provide additional motor protection from overheat.
PTC thermistor can be connected to terminals AVI and AGND.

A voltage divider resistor R is necessary to be connected as shown below in figure (b).

1) PTC Over Temperature Detection: If 08-10 =1 (Decelerate to stop) or 2 (Cost to stop).
Over temperature is detected by PTC input at terminal AVI.
When the signal rises above the warning detection limit set in parameter 08-15 and for the delay time set in parameter 08-12, the display will show ”OH4”(motor over heat detection), then the output frequency will decelerate or coast to stop depending on the setting of parameter 08-10.

2) If 08-10 = 3 Continue running when warning level is reached.(08-15).
Coast to stop when protection level is reached.(08-13).

When over temperature is detected by signal at terminal AVI increasing above the Warning detection limit set in parameter 08-15, then the display will show “OH3”(motor over heat warning level) and the motor will continue to run.
If temperature detected increases above the set limit in parameter 08-13 and for the delay time set in parameter 08-12 then the display will show “OH4” (motor over heat detection), and the motor will coast to stop.

3) Motor over heat detection “OH4” can be reset when the temperature detection level at terminal AVI becomes lower then the set level in parameter【08-14 PTC reset level】.

4) External PTC thermistor characteristics
Diagram in figure (a) shows two curves for Class F and Class H temperatures.

Tr = 150°C in class F，
Tr = 180°C in class H.

Tr - 5℃：R_{PTC}≦ 550Ω, put value of R_{PTC} into formula to calculate the value of V to be set in parameter【08-14 PTC reset level】。

Tr＋ 5℃：R_{PTC}≧1330Ω, put value of R_{PTC} into formula to calculate, the value of V to be set in parameter【08-13 PTC protection level】。

5) For different specifications of PTC thermistor, set the values for parameters 08-13 and 08-14 by calculating from the formula shown below.

$$V = \frac{1}{2} \times 10 \times \frac{R_{PTC} \;//\; Rin}{R + (R_{PTC} \;//\; Rin)}$$

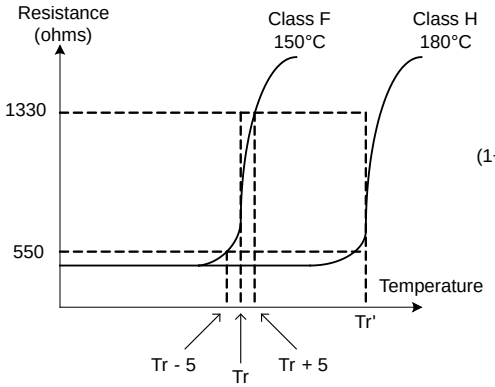

Tr：Temperature threshold value

(a) PTC Thermistor Characteristics

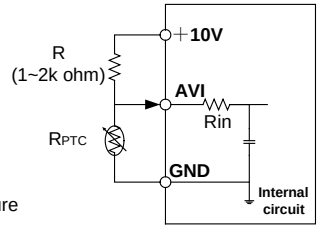

(b) PTC Thermistor Connections

**
Frame1&Frame2: Rin=164k ohm
Frame3&Frame4: Rin=204k ohm

08- 16	Fan Control Temperature Level
Range	【10.0~50.0】° C

- When **08-07=【0】** (Heat sink temperature dection control for cooling fan). Fan will run when temperature of heatsink is higher than 08-16;
  When temperature of heatsink decrease below ”(**setting value of 08-16)** - 20° **C**”, fan will stop.

08- 17	Over current protection level
Range	【0.0~60.0】 A
08- 18	Over current protection time
Range	【0.0~1500.0】 s

- When the output current exceeds the setting value of 08-17 and then keep running exceeds the setting value of 08-18, inverter will show “OL3” alarm and then stop running.
  (When the output current lower than the setting value of 08-17, 08-18 will be reset, over current protection function will be closed when 08-17 set to “0”.

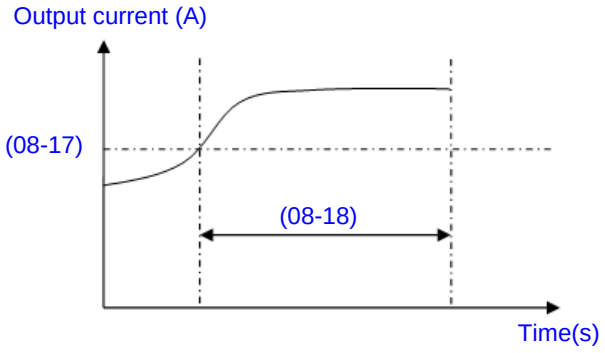

09- Communication function group

09- 00	Assigned Communication Station Number
Range	【1 ~ 32】

- 09-00 sets the communication station number when there are more than one unit on the communication network. Up to 32 Slave units can be controlled from one master controller such as a PLC.

09- 01	Communication Mode Select
Range	【0】:RTU 【1】:ASCII 【2】:BACnet
09- 02	**Baud Rate Setting (bps)**
Range	【0】:4800 【1】:9600 【2】:19200 【3】:38400
09- 03	**Stop Bit Selection**
Range	【0】:1 stop bit 【1】:2 stop bit
09- 04	**Parity Selection**
Range	【0】:no parity 【1】:even parity 【2】:odd parity
09- 05	**Data Format Selection**
Range	【0】:8 bit data 【1】:7 bit data

- Set 09-01~09-05 to configure communication format before starting communication.

09- 06	Communication time-out detection time
Range	【0.0~25.5】s

- 09-06 is related to communication test messages. When a test message is not responded within the time specified by 09-06, Inverter will be stopped according to the setting of 09-07, and then appear “COT” on keypad display. Once the 09-06=0, inverter will not appear “time-out”.

09- 07	Communication time-out operation selection
Range	【0】:Stop in deceleration time 1 and show COT after communication timeout 【1】:Stop in free run mode and show COT after communication timeout 【2】:Stop in deceleration time 2 and show COT after communication timeout 【3】:Keep running and show COT after Communication timeout

- Time-out detection time: 00.0~25.5 seconds; setting 00.0 seconds: disables time-out function.
- 09-06 is relative to communication test messages. When a test message is not responded within the time specified by 09-06, BDI50 actions according to the setting of 09-07(decel. to stop or coast to stop).

09- 08	Err6 fault tolerance times
Range	【0~20】

- 09-08 is relative to real communication messages. When a real message does not pass error check, that message is resent. The number of errors for the same message are counted and accumulated and if it reaches the setting of 09-08, BDI50 will show Err6 and stop according to the setting of 07-09.

09- 09	Drive Transmit Wait Time
Range	【5~65】2ms

- This parameter is used to set the converter to receive data from the sending date to the beginning of the time.

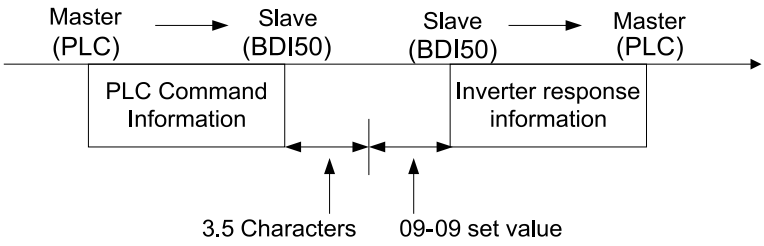

09- 10	BACnet stations
Range	【1~254】

10-PID function Setup

PID block diagram

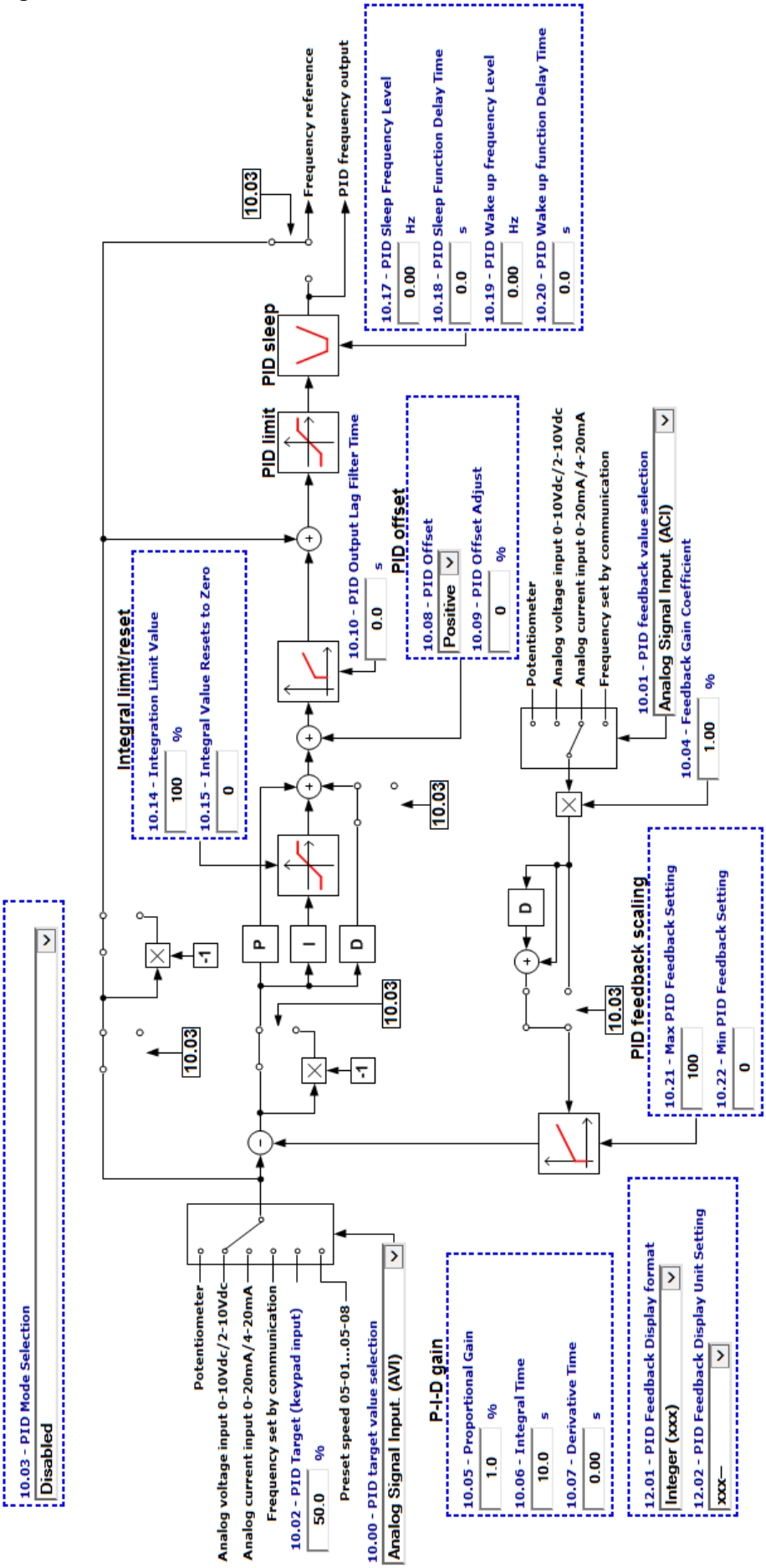

10- 00	PID target value selection
Range	【0】: Potentiometer on Keypad 【1】: External AVI Analog Signal Input 【2】: External ACI Analog Signal Input 【3】: Target Frequency set by Communication method 【4】: Set from keypad by parameter 10-02 【5】: Set from preset frequency

- 10-00 selections are only effective when frequency source selection is set to PID by parameters 00 - 05 \ 00 - 06= 6.
- When 10-00=5, PID target value is set according to Parameter Group 05 “preset frequency”. I.e. : When 00-05=6, 10-00=5, 10-03=1, 03-00=2, 03-01=3, 03-02=4, turn on S1~S3 sequentially (0 : OFF, 1 : ON), please check the output frequency on display is consistent with the 05-01 ~ 05-08.

	S1	S2	S3
	03-00=2	03-01=3	03-02=4
Preset frequency 0 (05-01)	0	0	0
Preset frequency 1 (05-02)	1	0	0
Preset frequency 2 (05-03)	0	1	0
Preset frequency 3 (05-04)	1	1	0
Preset frequency 4 (05-05)	0	0	1
Preset frequency 5 (05-06)	1	0	1
Preset frequency 6 (05-07)	0	1	1
Preset frequency 7 (05-08)	1	1	1

10- 01	PID feedback value selection
Range	【0】: Potentiometer on Keypad 【1】: External AVI Analog Signal Input 【2】: External ACI Analog Signal Input 【3】: Communication setting Frequency

- ！Note: 10-00 and 10-01 can not be set to the same value.

10- 02	PID keypad input
Range	【0.0~100.0】%
10- 03	**PID operation selection**
Range	【0】: PID Function disabled 【1】: FWD Characteristic. (Deviation is D-controlled) 【2】: FWD Characteristic. (Feedback is D-controlled) 【3】: REV Characteristic. (Deviation is D-controlled) 【4】: REV Characteristic. (Feedback is D-controlled) 【5】: FWD Characteristic. (Frequency Command +Deviation D Control) 【6】: FWD Characteristic. (Frequency Command + Feedback D Control) 【7】: Reverse Characteristic. (Frequency Command + Deviation D Control) 【8】: Reverse Characteristic. (Frequency Command + Feedback D Control)

- 10- 03 =【1】.

Ddeviation (target - detected value) is derivative controlled in unit time set in parameter 10-07.

- 10- 03 =【2】

Feedback (detected value) is derivative controlled in unit time set in parameter 10- 07.

- 10- 03 =【3】

Ddeviation (target value - detected value) is derivative controlled in unit time set in parameter 10- 07. If the deviation is positive, the output frequency decreases, vice versa.

- 10- 03 =【4】

Feed back (detected value) is derivative controlled in unit time set in parameter 10- 07.
If the deviation is positive, the output frequency decreases, vice versa.
Note:
For 10-03 = 1 or 2, If the deviation is positive, the output frequency increases and, vice versa.
For 10-03 = 3 or 4, If the deviation is positive, the output frequency decreases, vice versa.

- When **10-03= 【5~8】**, Output frequency = PID output frequency + frequency command (**10-03 = 【1~4】)** .

10- 04	**Feedback Gain coefficient**
Range	**【0.00 ~ 10.00】**

- 10-04 is the calibration gain. Deviation = set point – (feedback signal×10-04)

10- 05	**Proportional Gain**
Range	**【0.0 ~ 10.0】**

- 10- 05: Proportion gain for P control.

10- 06	**Integral Time**
Range	**【0.0 ~ 100.0】s**

- 10- 06: Integration time for I control

10- 07	**Derivative Time**
Range	**【0.00 ~ 10.00】s**

- 10- 07: Differential time for D control

10- 08	**PID Offset**
Range	**【0】: Positive Direction** **【1】: Negative Direction**
10- 09	**PID Offset Adjust**
Range	**【0 ~ 109】%**

- 10- 08 /10- 09: Calculated PID output is offset by 10-09 (the polarity of offset is according to10-08)

10-10	**PID Output Lag Filter Time**
Range	**【0.0 ~ 2.5】s**

- 10-10: Update time for output frequency.

10-11	**Feedback Loss Detection Mode**
Range	**【0】:**Disable

	【1】:Enable – Drive Continues to Operate After Feedback Loss 【2】:Enable – Drive “STOPS” After Feedback Loss

- **10-11= 【1】: On feed back loss** detection, continue running, and display ‘PDER’;
- **10-11= 【2】: On feed back loss** detection, stop, and display ‘PDER’。

10-12	Feedback Loss Detection Level
Range	【0 ~ 100】

- 10-12 is the level for signal loss. Error = (Set point – Feedback value). When the error is larger than the loss level setting, the feedback signal is considered lost.

10-13	Feedback Loss Detection Delay Time
Range	【0.0 ~25.5】s

- 10-13:The minimum time delay before feedback signal loss is determined.

10-14	Integration Limit Value
Range	【0 ~ 109】%

- 10-14: the Limiter to prevent the PID from saturating.

10-15	Integration Value Resets to Zero when Feedback Signal Equals the target Value
Range	【0】: Disabled 【1】: After 1 s 【30】: After 30 s (Range: 1 ~ 30 s)

- 10-15=0.As PID feedback value reaches the set point, the integral value will not be reset.
- 10-15=1~30.As PID feedback value reaches the set point, reset to 0 in 1~30 seconds and inverter stops. The inverter will run again when the feedback value differs from the set point value.

10-16	Allowable Integration Error Margin (Unit) (1 Unit = 1/8192)
Range	【0 ~ 100】%

- 10-16 = 0 ~ 100% unit value: Restart the tolerance after the integrator reset to 0.

10-17	PID Sleep Frequency Level
Range	【0.00~599.00】Hz
10-18	PID Sleep Function Delay Time
Range	【0.0 ~25.5】s
10-19	PID Wake up frequency Level
Range	【0.00 ~ 599.00】Hz
10-20	PID Wake up function Delay Time
Range	【0.0 ~ 25.5】s

- When PID output frequency is less than the sleep threshold frequency and exceeds the time of sleep delay, the inverter will decelerate to 0 and enters PID sleep mode.
- When PID output frequency is larger than the Wake up threshold frequency inverter will enter the PID mode again as shown in the timing diagram below.

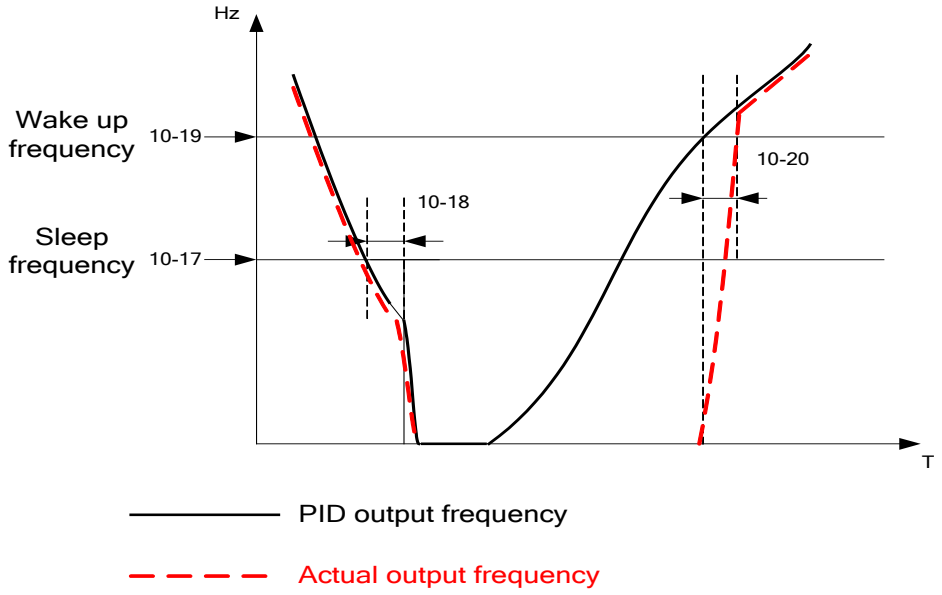

10-21	Max PID Feedback Level.
Range	【0 ~ 999】
10-22	Min PID Feedback Level.
Range	【0 ~ 999】

- Example: If 10-21=100 and 10-22=50 and the unit for the range from 0 to 999 will be defined with the parameters setting of 12-02 , actual feedback value variation range, will be scaled to 50 and 100 only for display, as Shown below.

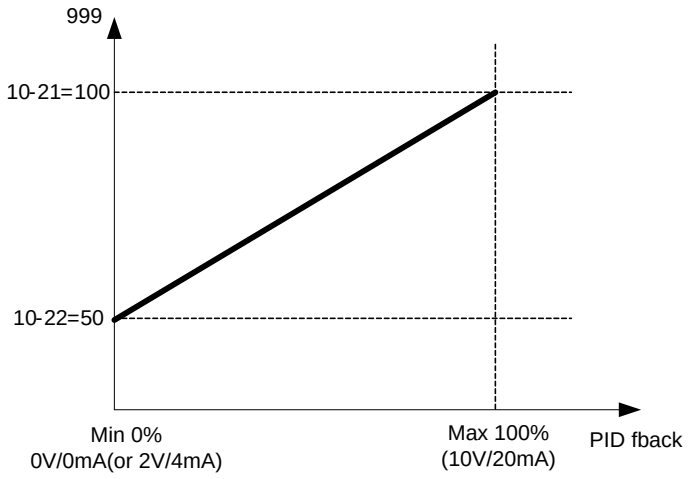

11 Performance control functions

11- 00	Prevention of Reverse operation
Range	【0】:Reverse command is enabled 【1】:Reverse command is disabled

➢ 11-00=1, the reverse command is **disabled**.

11- 01	Carrier Frequency
Range	【1~16】KHz

11- 02	Carrier mode selection
Range	【0】: Mode 0 3-phase PWM modulation 【1】: Mode 1 2-phase PWM modulation 【2】: Mode 2 random PWM modulation

The function can be used for audible noise reduction from a motor. It can be used in cases where the 100% torque from motor is not critical but it is necessary to reduce the audible noise.

➢ **Mode 0**: 3-phase PWM Modulation. Three Output transistors are ON at the same time (Full Duty). Carrier frequency is set according to Parameter 11-01.

➢ **Mode 1**: 2-phase PWM Modulation. Two output transistors are ON at the same time (2/3 Duty). This mode is suitable for variable torque applications such as Fan & pump. It reduces the Output transistor switching losses.
Carrier frequency will be according to parameter 11-01 with the exception noted below:

Note:
If 11-01 > 2KHz, 11-03=0 (Auto carrier frequency change is disabled) and the following conditions apply then 2-phase PWM will automatically change to 3- phase PWM with the carrier frequency = 2/3* (11-01).

Conditions:
- During Acceleration If Output frequency is < 0.7*Fmax.
- During Deceleration when output frequency is < 0.6*Fmax
- Fmax = (Par 01-02) in Control mode (Par 00-00) = (0) V/f mode
- Fmax = (Par 02-06) in Control mode (Par 00-00) = (1) SLV mode

➢ **Mode 2**: Random PWM Modulation
This modulation method will use 3-phase PWM and 2-phase PWM modulation in a random combination. Carrier frequency is set according to Parameter 11-01.

PWM mode selection considerations:

Modes	Name	IGBT Duty	Heat Losses	Torque Performance	Waveform Distortion	Motor Noise
0	3-Phase PWM	100%	High	High	Low	Low
1	2-Phase PWM	66.6%	Low	Low	High	High
2	Random PWM	66.6%	Low	Low	High	Mid

11- 03	Carrier Frequency auto reduction due to temperature rise
Range	【0】:Disable 【1】:Enable

- When inverter (heatsink) temperature rises above 80°C the Carrier Frequency is reduced by 4K.
- When the temperature falls below less than 70°C, Carrier Frequency (PAR 11-01) is reset to default.
- Temperature can be displayed by setting parameter 12-00=04000.

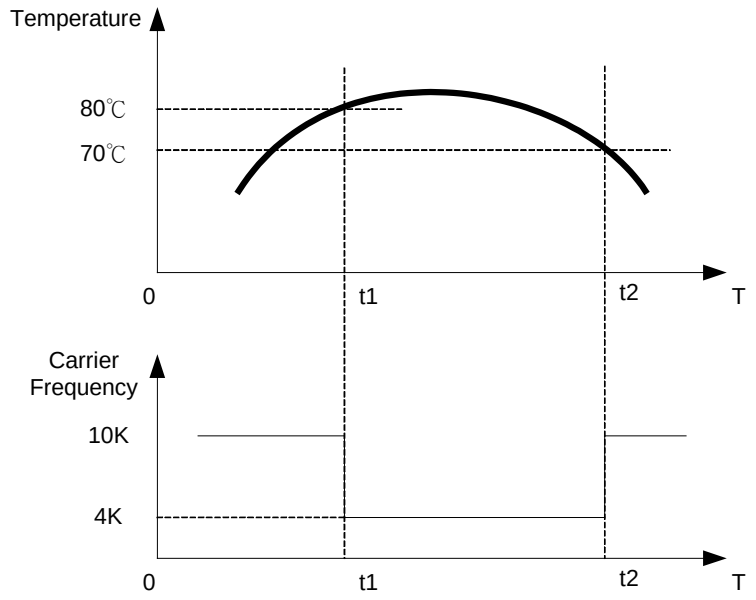

11- 04	S-Curve Acc 1
11- 05	S-Curve Acc 2
11- 06	S-Curve Dec 3
11- 07	S-Curve Dec 4
Range	【0.0 ~ 4.0】s

- Use S Curve parameters where a smooth acceleration or deceleration action is required, this will prevent possible damage to driven machines by sudden acceleration/deceleration.

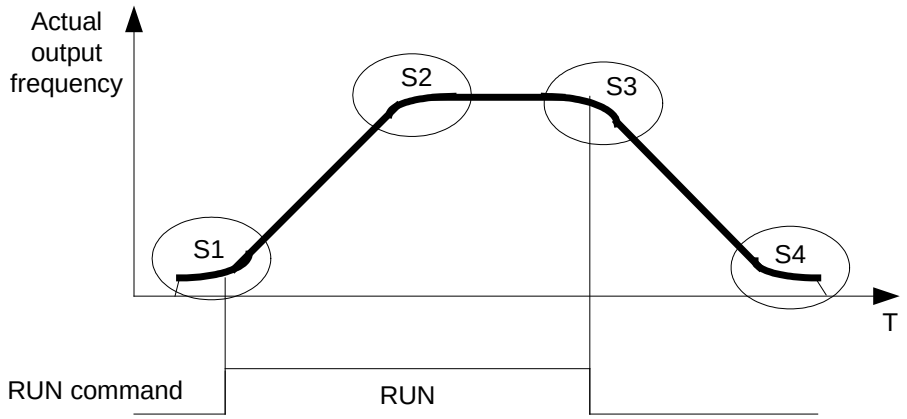

Note:

- Regardless of the stall prevention period, actual acceleration and deceleration time =preset

acceleration / deceleration time + S curve time.

- Please set the required individual S curve times in the parameters (11-04~11-07).
- When S curve time (11-04~11-07) is set as 0, the S curve function is disabled.
- The calculation of S curve time is based on the Maximum output frequency of motor (01-02), Please refer to the parameters (00-14/00-15/00-16/00-17).

11- 08	Skip frequency 1
11- 09	Skip frequency 2
11-10	Skip frequency 3
Range	【0.00 ~ 599.00】Hz
11-11	Skip frequency range. (± frequency band)
Range	【0.00 ~ 30.00】Hz

Skip frequency parameters can be used to avoid mechanical resonance in certain applications.
Example: 11-08=10.00(Hz); 11-09=20.00(Hz); 11-10=30.00(Hz); 11-11=2.00(Hz).

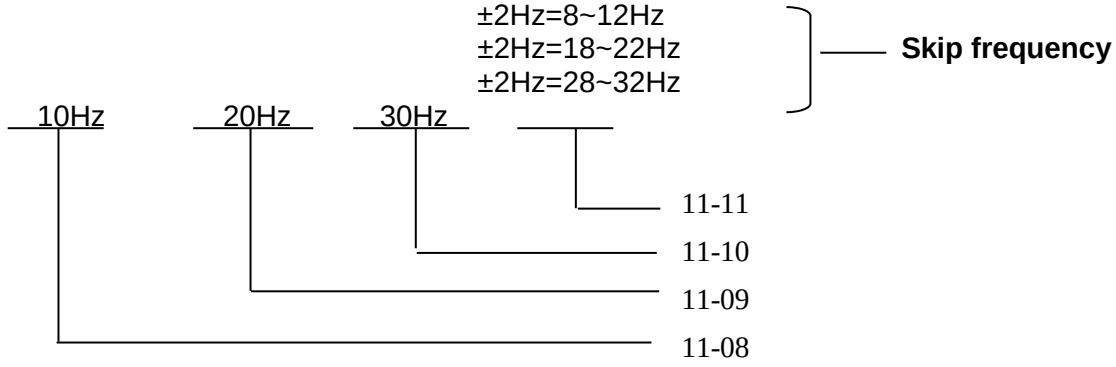

11-13	Regeneration Prevention Function
Range	【0】: Regeneration prevention function is disabled 【1】: Regeneration prevention function is enabled 【2】: Regeneration prevention function is enabled only during constant speed

- Regeneration Prevention Function:
  During excessive energy regeneration, the Vpn (DC bus) voltage will Increase and lead to OV (over voltage), to avoid over voltage due to regeneration the output frequency will be increased..
  Regeneration prevention function can be set according to the selections above.

Example: Regeneration prevention during acceleration.

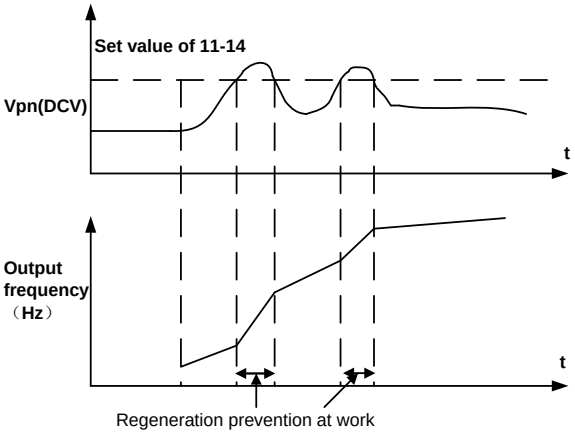

Example: Regeneration prevention during constant speed.

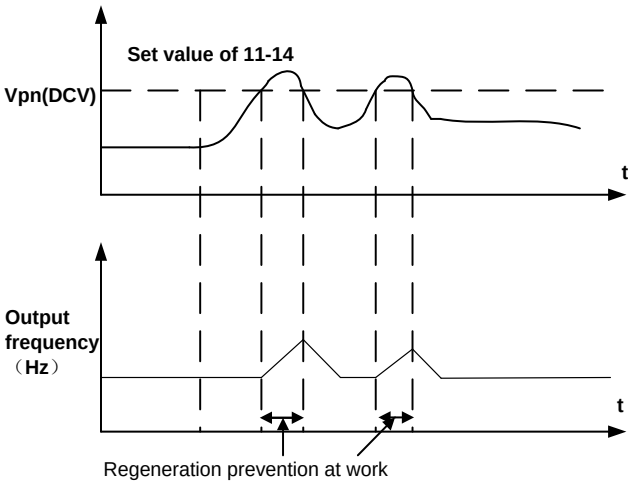

Example: Regeneration prevention during deceleration.

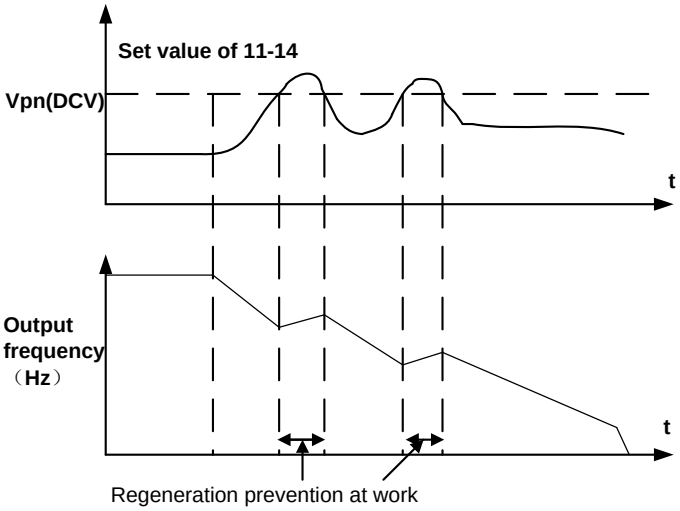

11-14	Regeneration Prevention Voltage Level
Range	200V: 300.0~400.0 V 400V: 600.0~800.0 V

- Regeneration prevention voltage level: if the DC bus voltage level is set too low, then over-voltage protection will not be reached, but the actual deceleration time will be extended.

11-15	Regeneration Prevention Frequency Limit
Range	【0.00~15.00】Hz

- Sets the regeneration **prevention** frequency limit.

11-16	Regeneration Prevention Voltage Gain
Range	【0~200】%
11-17	Regeneration Prevention Frequency Gain
Range	【0~200】%

- Parameters 11-16 & 11-17 can be used to enhance the response of the regeneration prevention control, Excessive adjustment could lead to output frequency instability.
- If decreasing the setting of parameter 11-16 is not correcting the output frequency instability then try decreasing the parameter 11-17.

11-18	Speed loop proportion gain

Range	**【0~65535】**
11-19	**Speed loop integration gain**
Range	**【0~65535】**
11-20	**Speed loop differential gain**
Range	**【0~65535】**

- SLV control mode use a output speed estimator as speed feedback value. Speed control system adjusts the output frequency to follow the value of speed feedback command.
- The output frequency from the speed control system is then used to adjust the torque reference as shown in the diagram below..

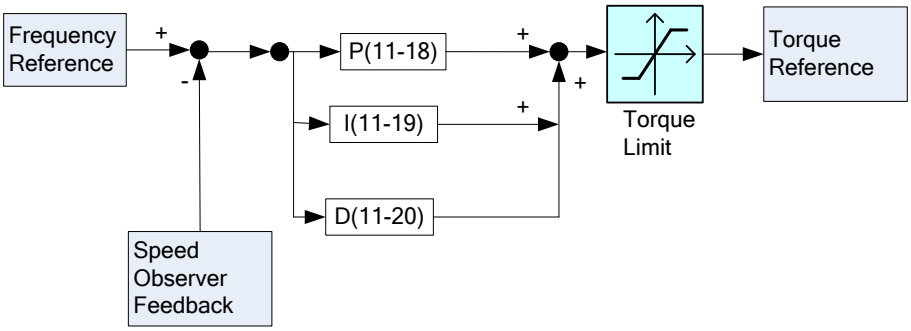

12 Monitor function group

12- 00	Display Mode
Range	0 0 0 0 0 MSD LSD 00000~77777 Each digit can be set from 0 to 7 as listed below. 【0】:Disable display 【1】:Output Current 【2】:Output Voltage 【3】: DC voltage 【4】:Temperature 【5】:PID feedback 【6】:AVI 【7】:ACI

- MSD= Most significant digit. LSD= Least significant digit.
- Note: MSD of parameter 12-00 sets the power on display, other digits set user selected displays. (refer to P4-4)

12- 01	PID Feedback Display Mode
Range	【0】:Displayed in Integer (xxx) 【1】:Displayed with One Decimal Place (xx.x) 【2】:Displayed with Two Decimal Places (x.xx)
12- 02	**PID Feedback Display Unit Setting**
Range	【0】:xxx-- 【1】:xxxpb(pressure) 【2】:xxxfl(flow)

12- 03	Custom Units (Line Speed) Display Mode
Range	【0~65535】rpm

- Set motor rated rpm in this parameter if required then the display will show this value when inverter output frequency reaches the motor name plate frequency. 50Hz or 60 Hz as appropriate.
- The line speed display is linearly proportional to the output frequency 0 to 50Hz or 0-60 Hz as appropriate. Motor synchronous speed = 120 x Rated frequency/Number of poles.

12- 04	Custom Units (Line Speed) Display Mode
Range	【0】:Drive Output Frequency is Displayed 【1】:Line Speed is Displayed in Integer (xxxxx) 【2】:Line Speed is Displayed with One Decimal Place (xxxx.x) 【3】:Line Speed is Displayed with Two Decimal Places (xxx.xx) 【4】:Line Speed is Displayed with Three Decimal Places (xx.xxx)

- **12- 04≠0**, line speed is displayed while the inverter is running or stopped.

12- 05	Input and output terminal status display
Range	Read only(Panel read only)

- When any of S1 ~ S5 is turned on, corresponding segments on the digital display digits will be on.
- When relay output RY1 is on, the corresponding digit will be on as shown below.
- When no Digital input and no relay output, they will show - - - - - .

Example 1: The following figure shows 12 - 05 display status,
when S1, S3, S5 Inputs are ON and S2, S4 and RY1 are OFF.

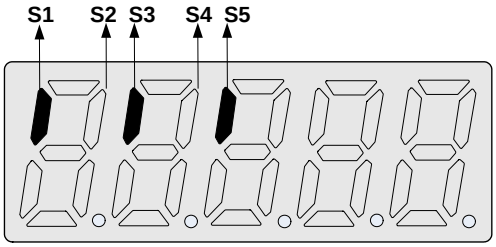

Example 2: The following figure shows 12 - 05 display status
when S2, S3, S4 inputs are ON and S1, S5 are OFF but RY1 is ON.

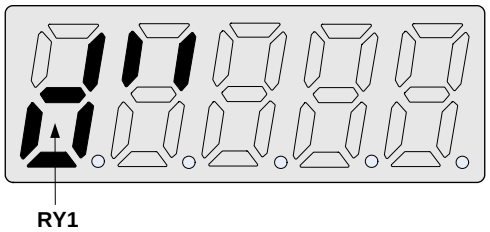

13 Inspection & Maintenance functions

13- 00	Drive Horsepower Code
Range	----

Inverter Model:	13- 00 show	Inverter Model:	13- 00 show
BDI50-1004-…-2M	2P5	BDI50-2007-…-4	401
BDI50-1007-…-2M	201	BDI50-2015-…-4	402
BDI50-2015-…-2M	202	BDI50-2022-…-4	403
BDI50-2022-…-2M	203	BDI50-3037-…-4	405
BDI50-3037-…-2T	205	BDI50-3055-…-4	408
BDI50-4055-…-2T	208	BDI50-4075-…-4	410
BDI50-4075-…-2T	210	BDI50-4110-...-4	415

13-01	Software Version
Range	----

13- 02	Fault Log Display (Latest 3 faults)
Range	----

- Last three faults are stored in a stack and whenever there is a new fault the previous faults are pushed down the stack. So the fault stored in 2.xxx will be transferred to 3.xxx, and the one in 1.xxx to 2.xxx. The recent fault will be stored in the empty register 1.xxx.
- Use Up▲and Down▼ keys to scroll between the fault registers.
- Pressing reset key when parameter 13-02 is displayed then all three fault registers will be cleared and the display for each register will change to 1. ---, 2. ---, 3. ---.
- E.g. fault log content is ‘1.OC-C’; this indicates the latest fault is OC-C, etc.

13- 03	Accumulated Inverter Operation Time 1
Range	【0~23】Hours
13- 04	Accumulated Inverter Operation Time 2
Range	【0~65535】Days
13- 05	Accumulated Inverter Operation Time Mode
Range	【0】:Power on time 【1】:Operation time

- When the operation time recorded in accumulator 1(Parameter 13-03) reaches 24 hours
- The recorded value in accumulator 2 parameter 13-04 changes to 1 day and the value in accumulator 1 is reset to 0000.

Password protection function

Password protection function is available on all BDI50 models.

13- 06	Parameter lock
Range	【0】: Enable all Functions 【1】: Preset speeds 05- 01~05- 08 cannot be changed 【2】: All Functions cannot be changed Except for preset speeds set in 05- 01~05- 08 【3】: Disable All Function Except 13-06

- Parameter 13-06 represents a first level of access control to parameters without any password protection.

13- 07	Parameter Lock Key Code
Range	【00000~65535】

- Parameter 13-07 allows to lock the access to all parameters. This parameter is only available from Keypad.
- When a parameter lock key number is entered in parameter 13-07. For any parameter modification the key number has to be entered.

1. Parameter Lock Key Code STATUS

Parameter 13-07 can have the following STATUS:

13-07 = 00000 No password is set (Default is 00000 which means no Password)

13-07 = 00001 Password is set and waiting for confirmation but Lock function is disabled

13-07 = 00002 Password is confirmed and Lock function is enabled

2. Parameter Lock Key Code SETTINGS

2.1 The procedure to set a new password is the following (the new password for the example is 12345):

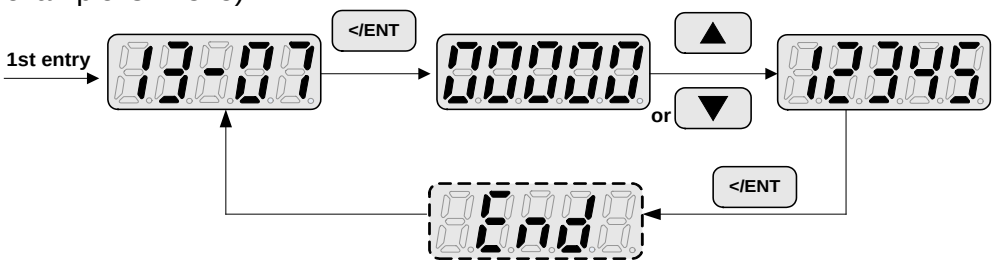

The Parameter Lock Key Code STATUS become: 00001. User continue to have free access to parameters depending on 13-06 parameter setting. To lock parameters, password must be confirmed (see step 2.2)

When a new password is set, please use all precautions to recover it simply.

2.2 After step 2.1, the procedure to Lock the access to all parameters consists into confirming the password:

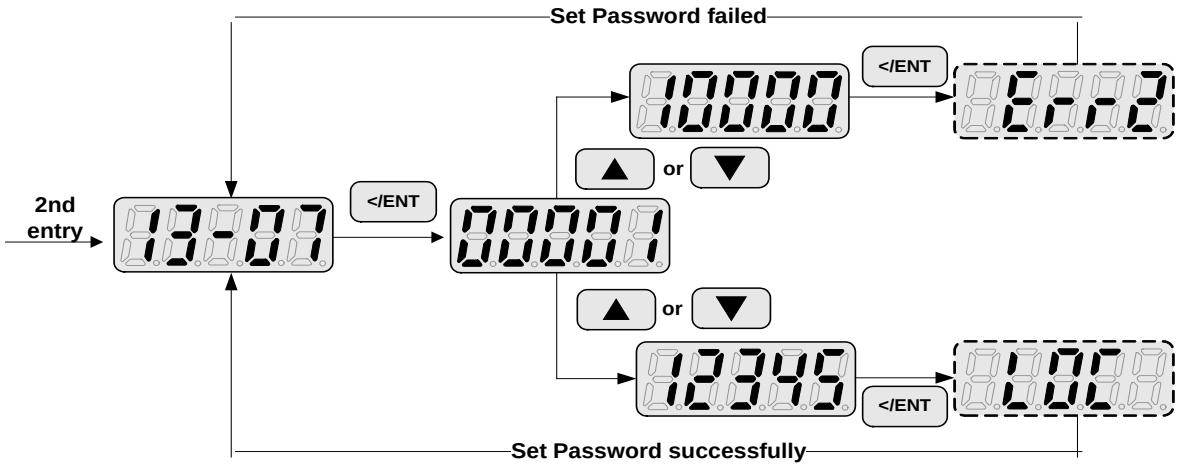

The Parameter Lock Key Code STATUS become: 00002. User has no access to parameters setting.

2.3 After step 2.2, the procedure to UNLock the access to all parameters is the following:

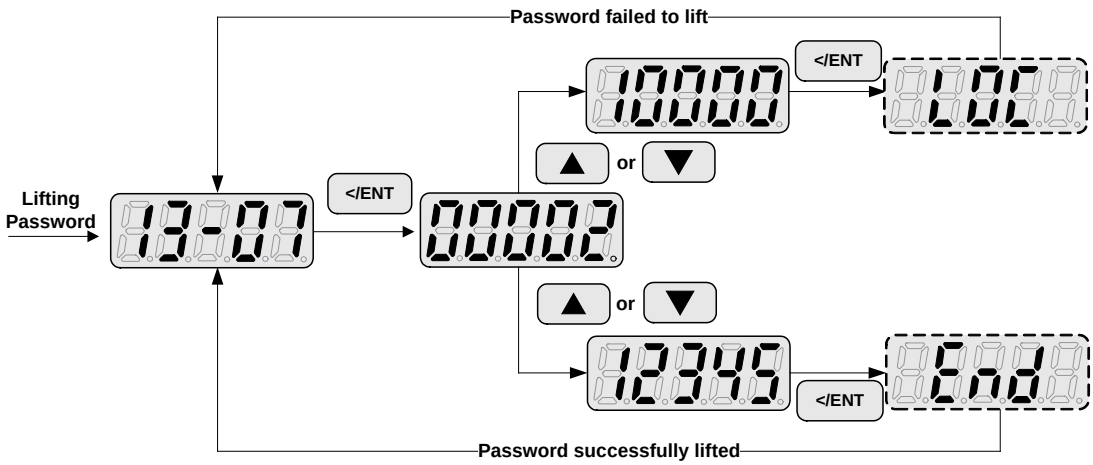

3. Lost password recovery

If a password set by customer is lost, please contact Gefran Service Team for assistance.

13- 08	Reset Drive to Factory Settings
Range	**【1150】: Reset to factory setting (50Hz,220V/380V system)** **【1160】: Reset to factory setting (60Hz,220V/380V system)** **【1250】: Reset to factory setting (50Hz,230V/400V system)** **【1260】: Reset to factory setting (60Hz,230V/460V system)** **【1350】: Reset to factory setting (50Hz,220V/415V system)** **【1360】: Reset to factory setting (60Hz,230V/400V system)**

- When a Parameter lock key number has been entered in parameter 13 – 07. This key number must be entered first before parameter 13-08 can be used.
- Reset 13-08 to default setting will reset parameter 02 group.
- For built-in EMC filter models, the default setting of 13-08 is “1250”.
  For without built-in EMC filter models, the default setting of 13-08 is “1360”

Chapter 5 Troubleshooting and maintenance

5.1 Error display and corrective action

5.1.1 Manual Reset and Auto-Reset

Faults which cannot be recovered manually			
Display	**content**	**Cause**	**Corrective action**
-OV- -OU-	Voltage too high when stopped	Detection circuit malfunction	Consult with the supplier
-LV- -LU-	Voltage too low when stopped	1. Power voltage too low 2. Pre-charge resistor or fuse burnt out. 3. Detection circuit malfunction	1. Check if the power voltage is correct 2. failed resistor or fuse 3. Consult with the supplier
-OH- -OH-	The inverter is overheated when stopped	1. Detection circuit malfunction 2. Ambient temperature too high or bad ventilation	Improve the ventilation conditions, if no result then replace the inverter
OH-C OH-C	The inverter is overheated during running	1. IGBT temperature is too high or poor ventilation 2. temperature sensor error or circuit malfunctions	1. Reduce carrier frequency 2. Improve the ventilation conditions, if no result then replace the inverter
CtEr CtEr	Current Sensor detection error	Current sensor error or circuit malfunction	Consult with the supplier
HPErr HPErr	Inverter capacity setting error: Inverter capacity setting 13-00 does not match the rated voltage.	The inverter capacity setting (13-00) does not match the hardware voltage levels	Check the inverter capacity setting (13-00) to meet the hardware voltage levels.
Err4 Err4	CPU Unusual interruption	External noise interference	1. Remove the interference source then restart by switching power OFF/ON 2. If not resolved then Consult with the supplier
EPr EPr	EEPROM problem	Faulty EEPROM	Consult with the supplier
COt COt	Communication error	Communications disruption	Check the wiring

Faults which can be recovered manually and automatically			
Display	**content**	**Cause**	**Corrective action**
OC-A OC-A	Over-current at acceleration	1.Acceleration time too short 2.The capacity of the motor exceeds the capacity of the inverter 3.Short circuit between the motor coil and the case 4.Short circuit between motor wiring and ground 5.IGBT module damaged	1.Set a longer acceleration time 2.Replace inverter with one that has the same rating as that of the motor 3.Check the motor 4.Check the wiring 5.Consult with the supplier
OC-C OC-C	Over-current at fixed speed	1. Transient load change 2. Transient power change	1.Increase the capacity of the inverter 2.Install inductor on the power supply input side
OC-d OC-d	Over-current at deceleration	The preset deceleration time is too short.	Set a longer deceleration time
OC-S OC-S	Over current at start	1.Short circuit between the motor coil and the case 2.Short circuit between motor coil and ground 3.IGBT module damaged	1.Inspect the motor 2.Inspect the wiring 3.Consult with the supplier
OV-C OU-C	Excessive Voltage during operation/ deceleration	1.Deceleration time setting too short or excessive load inertia 2.Power voltage varies widely (fluctuates)	1.Set a longer deceleration time 2.Consider use of a brake resistor and/or brake module (For 400V models or 200V 5hp~15hp models) 3.Consider use of a reactor at the power input side
PF PF	Input phase Loss	Abnormal fluctuations in the main circuit voltage	1.Check the main circuit power supply wiring. 2.Check the power supply voltage
Faults which can be recovered manually but not automatically			
Display	**content**	**Cause**	**Corrective action**
OC OC	Over-current during stop	Detection circuit malfunction	Consult with the supplier
OL1 OL1	Motor overload	loading too large	Consider increasing the Motor capacity
OL2 OL2	Inverter overload	Excessive Load	Consider increasing the inverter capacity

Faults which can be recovered manually but not automatically			
Display	**content**	**Cause**	**Corrective action**
CL CL	Inverter over current: Wait 1 minute to reset. If it occurs CL or OL2 up to 4 successive times then wait 5 minutes to reset	Inverter over current warning：inverter current reach the level of over current protection	Check load condition and running period time.
LV-C LU-C	Voltage too low during operation	1.Power voltage too low 2.Power voltage varies widely (fluctuates)	1.Improve power quality 2.Consider adding a reactor at the power input side
OVSP OUSP	motor rotation over speed	The actual rotation speed is different to the set speed.	1.Check for excessive load 2.Check weather frequency setting signal is right or not
OH4 OH4	motor over heat error	1.If temperature detected increases above the set limit in parameter 08-13 and for the delay time set in parameter 08-12 then the display will show “OH4” (motor over heat detection), and the motor will coast to stop. 2.Motor over heat detection “OH4” can be reset when the temperature detection level is lower than the set level in parameter【08-14 PTC reset level】.	1.To improve the ventilation condition 2. Adjust parameter 08-15

5.1.2 Keypad Operation Error Instruction

Display	content	Cause	Corrective action
LOC LOC	1.Parameter already locked 2.Motor direction locked 3.Parameter password (13-07) enabled	1.Attempt to modify frequency parameter while 13-06>0. 2.Attempt to reverse direction when 11- 00=1. 3.Parameter (13 - 07) enabled, set the correct password will show LOC.	1.Adjust 13-06 2.Adjust 11-00
Err1 Err 1	Keypad operation error	1.Press ▲ or ▼while 00-05/00-06>0 or running at preset speed. 2.Attempt to modify the Parameter.Can not be modified during operation (refer to the parameter list)	1.The ▲ or▼ is available for modifying the parameter only when 00-05/00-06=0 2.Modify the parameter in STOP mode.

Display	content	Cause	Corrective action
Err2 Err2	Parameter setting error	1. 00-13 is within the range of (11-08 ±11-11) or (11-09 ±11-11) or (11-10 ±11-11) 2. 00-12≦00-13 3. 00-05/00-06 or 00-00 / 10-01 set the same value 4. Modifying parameters 01-01~01-09 when 01-00≠ 7. 5. a.If this parameter is parameterized for both functions (AVI/PTC) at the same time. b.PTC function is enabled by setting 08-10≠0. 6. Parameter password function (13-07) set incorrect.	1. modify11-08~11-10 or 11-11 2. 00-12>00-13 3.set 00-05 / 00-06 or 10-00 / 10-01 to be different value 4.set 01-00=7 5.PTC function source can not be the same as frequency source or PID command via AVI. 6. Please set correct password
Err5 Err5	Modification of parameter is not available in communication	1.Control command sent during communication. 2.Attempt to modify the function 09-02~ 09-05 during communication	1.Issue enable command before communication 2.Set parameters 09-02~ 09-05 function before communication
Err6 Err6	Communication failed	1.Wiring error 2.Communication Parameter setting error. 3.Incorrect communication protocol	1.Check hardware and wiring 2.Check Functions(09-00~ 09- 05).
Err7 Err7	Parameter conflict	1.Attempt to modify the function 13-00/13-08. 2.Voltage and current detection circuit is abnormal.	If reset is not possible, please consult with the supplier.

5.1.3 Special conditions

Display	Fault	Description
StP0 StP0	Zero speed at stop	STP0 is a message displayed on keypad (and on communication) to signal to the user that the motor doesn't move because the preset frequency is very low. In V/f mode, STP0 comes out at less than 1.3Hz (50Hz set) and at less than 1.5Hz (60Hz set) In SLV mode, STP0 comes out at less than 1Hz.
StP1 StP1	Fail to start directly On power up.	1. If the inverter is set for external terminal control mode (00-02/00-03=1) and direct start is disabled (07-04=1) 2. The inverter cannot be started and will flash STP1. 3. The run input is active at power-up, refer to descriptions of (07-04).
StP2	Keypad Stop	1. If the Stop key is pressed while the inverter is set to

Display	Fault	Description
StP2	Operated when inverter in external Control mode.	external control mode (00-02/00-03=1) then'STP2'flashes after stop. 2. Release and re-activate the run contact to restart the inverter.
E.S. E.S.	External Rapid stop	When external rapid stop input is activated the inverter will decelerate to stop and the display will flash with E.S. message.
b.b. b.b.	External base block	When external base block input is activated the inverter stops immediately and then the display will flash with b.b. message.
PdEr PdEr	PID feedback loss	PID feedback loss is detected.
Alter AtEr	auto tuning error	other errors show up in the process of auto tuning.
OH3 OH3	motor over heat warning	If 08-10 = 3，When over temperature is detected by signal at terminal AVI increasing above the warning detection limit set in parameter 08-15, then the display will show "OH3"(motor over heat warning level) and the motor will continue to run.

5.2 General troubleshooting

Status	Checking point	Remedy
Motor runs in wrong direction	Is the wiring for the output terminals correct?	Wiring must match U, V, and W terminals of the motor.
	Is the wiring for forward and reverse signals correct?	Check for correct wiring.
The motor speed can not be regulated.	Is the wiring for the analog frequency inputs correct?	Check for correct wiring.
	Is the setting of operation mode correct?	Check the Frequency Source set in parameters 00-05/00-06.
	Is the load too excessive?	Reduce the load.
Motor running speed too high or too low	Check the motor specifications (poles, voltage…) correct?	Confirm the motor specifications.
	Is the gear ratio correct?	Confirm the gear ratio.
	Is the setting of the highest output frequency correct?	Confirm the highest output frequency
Motor speed varies unusually	Is the load too excessive?	Reduce the load.
	Does the load vary excessively?	1.Minimize the variation of the load. 2.Consider increasing the capacities of the inverter and the motor.
	Is the input power unstable or is there a phase loss ?	1.Consider adding an AC reactor at the power input side if using single-phase power.
		2.Check wiring if using three-phase power
Motor can not run	Is the power connected to the correct L1, L2, and L3 terminals? is the charging indicator lit ?	1.Is the power applied? 2.Turn the power OFF and then ON again. 3.Make sure the power voltage is correct. 4.Make sure screws are secured firmly.

Status	Checking point	Remedy
	Is there voltage across the output terminals T1, T2, and T3?	Turn the power OFF and then ON again.
	Is overload causing the motor to stall?	Reduce the load so the motor will run.
	Are there any abnormalities in the inverter?	See error descriptions to check wiring and correct if necessary.
	Is there a forward or reverse run command ?	
	Has the analog frequency signal been input?	1.Is analog frequency input signal wiring correct? 2.Is voltage of frequency input correct?
	Is the operation mode setting correct?	Operate through the digital keypad

5.3 Routine and periodic inspection

To ensure stable and safe operations, check and maintain the inverter at regular intervals.
Use the checklist below to carry out inspection.
Disconnect power after approximately 5 minutes to make sure no voltage is present on the output terminals before any inspection or maintenance.

Items	Details	Checking period		Methods	Criteria	Remedies
		Daily	1Year			
Environment & Ground connection						
Ambient conditions at the installation	Confirm the temperature and humidity at the machine	◎		Measure with thermometer and hygrometer	Temperature: -10 ~40° C (14~120° F) Humidity: Below 95%RH	Improve the ambient or relocate the drive to a better area.
Installation Grounding	Is the grounding resistance correct?		◎	Measure the resistance with a multi-tester	200Vclass: below 100Ω	Improve the grounding if needed.
Terminals & Wiring						
Connection terminals	Any loose parts or terminals?		◎	Visual check Check with a screwdriver	Correct installation requirement	Secure terminals and remove rust
	Any damage to the base ?		◎			
	Any corroded Terminals?		◎			
Wiring	Any broken wires?		◎	Visual check	Correct wiring requirement	Rectify as necessary
	Any damage to the wire insulation?		◎			
voltage						
Input power voltage	Is the voltage of the main circuit correct?	◎		Measure the voltage with a multi-tester	Voltage must conform with the spec.	Improve input voltage if necessary.
Circuit boards and components						
Printed circuit board	Any contamination or damage to printed circuit board?		◎	Visual check	Correct component condition	Clean or replace the circuit board
Power component	Any dust or debris		◎			Clean components
	Check resistance between terminals		◎	Measure with a multi-tester	No short circuit or broken circuit in three phase output	Consult with the supplier
Cooling System						
Cooling fan	Unusual vibration and noise?		◎	Visual and sound check	Correct cooling	Consult with the supplier
	Excessive dust or debris	◎		Visual check		Clean the fan
Heat sink	Excessive dust or debris	◎				Clean up debris or dust
Ventilation Path	Is the ventilation path blocked?	◎				Clear the path

5.4 Maintenance

To ensure long-term reliability, follow the instructions below to perform regular inspection. Turn the power off and wait for a minimum of 5 minutes before inspection to avoid potential shock hazard from the charge stored in high-capacity capacitors.

1. Maintenance Check List.

➢ Ensure that temperature and humidity around the inverters is as required in the instruction manual, installed away from any sources of heat and the correct ventilation is provided..
➢ For replacement of a failed or damaged inverter consult with the local supplier.
➢ Ensure that the installation area is free from dust and any other contamination.
➢ Check and ensure that the ground connections are secure and correct.
➢ Terminal screws must be tight, especially on the power input and output of the inverter.
➢ Do not perform any insulation test on the control circuit.

2. Insulation test Method .

Single Phase

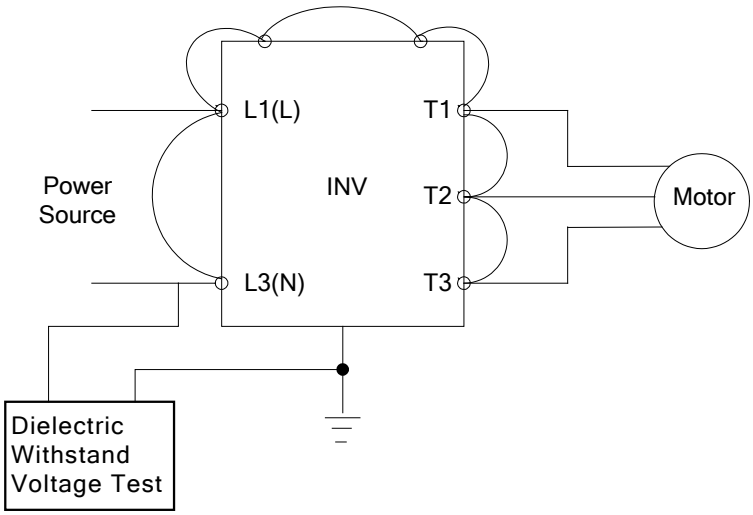

Three Phase

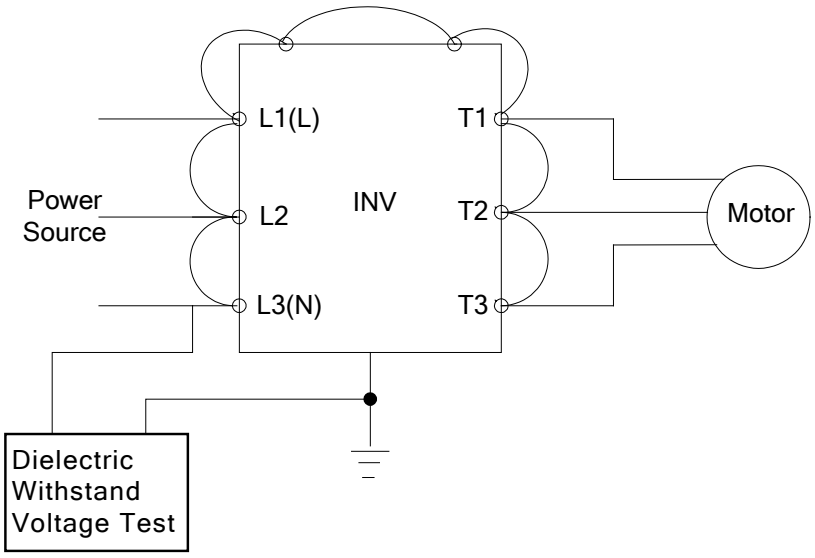

Chapter 6 Accessories

6.1 Input choke Specifications

Model	Specification	
	Current (A)	Inductance (mH) (1)
BDI50-1004-…-2M	7.2	3.05
BDI50-1007…-2M	11.0	2.00
BDI50-2015…-2M	15.5	1.42
BDI50-2022-…-2M	21.0	1.05
BDI50-1007-…-2T	11.0	2.00
BDI50-2015-…-2T	15.5	1.42
BDI50-2022-…-2T	21.0	1.05
BDI50-3037-…-2T	20.0	0.63
BDI50-4055-…-2T	33.0	0.38
BDI50-4075-…-2T	42.0	0.30
BDI50-2007-…-4	4.2	5.25
BDI50-2015-…-4	5.6	3.94
BDI50-2022-…-4	7.3	3.02
BDI50-3037-…-4	12.0	1.84
BDI50-3055-…-4	17.0	1.30
BDI50-4075-…-4	23.0	0.96
BDI50-4110-…-4	31.0	0.71

Choke Model	Code	Dimensions	Weight
		WxHxd (mm)	(kg)
LR3y-1030	S7AB3	120 x 125 x 65	1.9
LR3y-2040	S7AAG	120 x 125 x 65	2
LR3y-2055	S7AB5	120 x 125 x 75	2.2
LR3y-2075	S7AB6	150 x 155 x 79	4.9
LR3y-3110	S7AB7	150 x 155 x 79	5
LR3y-3150	S7AB8	150 x 169 x 85	5.5
LR3y-1007	S7AAD	120 x 125 x 65	1.8
LR3y-1015	S7AAE	120 x 125 x 65	1.8
LR3y-1022	S7AAF	120 x 125 x 65	1.8
LR3y-2040	S7AAG	120 x 125 x 65	2
LR3y-2055	S7AB5	120 x 125 x 75	2.2
LR3y-2075	S7AB6	150 x 155 x 79	4.9
LR3y-3110	S7AB7	150 x 155 x 79	5

※**Note**: (1) Calculated inductance based on 3% reactance.

6.2 Output choke Specifications

Model	Choke Model	Code	Dimensions	Weight
			WxHxd (mm)	(kg)
BDI50-1004-…-2M	**LU3-001**	S7FG1	120 x128 x 71	2.7
BDI50-1007…-2M	**LU3-001**	S7FG1	120 x128 x 71	2.7
BDI50-2015…-2M	**LU3-003**	S7FG2	180 x 170 x 110	5.2
BDI50-2022-…-2M	**LU3-005**	S7FG3	180 x 170 x 110	5.8
BDI50-1007-…-2T	**LU3-001**	S7FG1	120 x128 x 71	2.7
BDI50-2015-…-2T	**LU3-003**	S7FG2	180 x 170 x 110	5.2
BDI50-2022-…-2T	**LU3-005**	S7FG3	180 x 170 x 110	5.8
BDI50-3037-…-2T	**LU3-011**	S7FG4	180 x 180 x 130	8
BDI50-4055-…-2T	**LU3-011**	S7FG4	180 x 180 x 130	8
BDI50-4075-…-2T	**LU3-015**	S7FH2	180 x 160 x 170	7.5
BDI50-2007-…-4	**LU3-001**	S7FG1	120 x128 x 71	2.7
BDI50-2015-…-4	**LU3-001**	S7FG1	120 x128 x 71	2.7
BDI50-2022-…-4	**LU3-001**	S7FG1	120 x128 x 71	2.7
BDI50-3037-…-4	**LU3-003**	S7FG2	180 x 170 x 110	5.2
BDI50-3055-…-4	**LU3-005**	S7FG3	180 x 170 x 110	5.8

Model	Choke Model	Code	Dimensions	Weight
BDI50-4075-…-4	**LU3-011**	S7FG4	180 x 180 x 130	8
BDI50-4110-…-4	**LU3-011**	S7FG4	180 x 180 x 130	8

※**Note**: Chokes for inverter max frequency = 400 Hz and max Switching frequency = 20 kHz.

6.3 Fuse Specification

Model	HP	kW	Rating (aR type)
BDI50-1004-…-2M / 2T	0.5	0.4	15A / 300VAC
BDI50-1007-…-2M / 2T	1	0.75	15A / 300VAC
BDI50-2015-…-2M / 2T	2	1.5	30A / 300VAC
BDI50-2022-…-2M / 2T	3	2.2	30A / 300VAC
BDI50-3037-…-2T	5	3.7	30A / 300VAC
BDI50-4055-…-2T	7.5	5.5	60A / 300VAC
BDI50-4075-…-2T	10	7.5	60A / 300VAC
BDI50-2007-…-4	1	0.75	5A / 600VAC
BDI50-2015-…-4	2	1.5	15A / 600VAC
BDI50-2022-…-4	3	2.2	20A / 600VAC
BDI50-3037-…-4	5	3.7	20A / 600VAC
BDI50-3055-…-4	7.5	5.5	40A / 600VAC
BDI50-4075-…-4	10	7.5	40A / 600VAC
BDI50-4110-…-4	15	11	70A / 600VAC

6.4 Fuse Specification (UL Model Recommended)

Model	Manufacture	Type	Rating
BDI50-1004-…-2M	Bussmann	10CT/16CT	690V 10A/690V 16A
BDI50-1007-…-2M	Bussmann	16CT/20CT	690V 16A/690V 20A
BDI50-2015-…-2M	Bussmann	30FE	690V 30A
BDI50-2022-…-2M	Bussmann	50FE	690V 50A
BDI50-1007-…-2T	Bussmann	10CT	690V 10A
BDI50-2015-…-2T	Bussmann	16CT	690V 16A
BDI50-2022-…-2T	Bussmann	20CT	690V 20A
BDI50-3037-…-2T	Bussmann	50FE	690V 50V
BDI50-4055-…-2T	Bussmann	63/100 FE	690V 63A
BDI50-4075-…-2T	Bussmann	80/100 FE	690V 80/690V100A
BDI50-2007-…-4	Bussmann	10CT	690V 10A
BDI50-2015-…-4	Bussmann	16CT	690V 16A
BDI50-2022-…-4	Bussmann	20CT	690V 20A
BDI50-3037-…-4	Bussmann	25ET	690V 25A
BDI50-3055-…-4	Bussmann	40FE	690V 40A
BDI50-4075-…-4	Bussmann	50ET	690V 50A
BDI50-4110-…-4	Bussmann	63ET	690V 63A

6.5 Braking Resistor

Model: BDI50-	(HP)	(kW)	Braking resistor					ED(%)	Braking torque (%)
			(W)	(Ω)	Model suggested	Code	Q.ty		
3037-…-2T	**5**	**3.5**	**390**	**40**	**RFH 600 40R**	S6F62	1	**10**	**117**
4055-…-2T	**7.5**	**5.5**	**600**	**25**	**RFPD 750 DT 26R**	S8T0CZ	1	**10**	**123**
4075-…-2T	**10**	**7.5**	**780**	**20**	**RF 780 20R**	S8SA28	1	**10**	**117**
2007-…-4	**1**	**0.75**	**60**	**750**	**RFH 165 720R**	S8SA25	1	**8**	**123**
2015-…-4	**2**	**1.5**	**150**	**400**	**RF 300 DT 400R**	S8T0CR	1	**10**	**117**
2022-…-4	**3**	**2.2**	**200**	**250**	**RF 220 T 250R**	S8T0CP	1	**8**	**123**
3037-…-4	**5**	**3.5**	**400**	**150**	**RFH 600 160R**	S6F64	1	**10**	**123**
3055-…-4	**7.5**	**5.5**	**600**	**100**	**RFPD 900 DT 100R**	S8T0CM	1	**10**	**123**
4075-…-4	**10**	**7.5**	**750**	**80**	**RFPR 750 D 80R**	S8SZ0	1	**10**	**117**
4110-…-4	**15**	**11**	**1600**	**50**	**BRT 1K6 52R**	S8SA30	1	**10**	**123**

※**Note**: Braking resistor : **W= (Vpnb * Vpnb) * ED% / Rmin**

1. W: The power consumption of braking action
2. Vpnb: The voltage of braking action (220V=380VDC, 440V=780VDC)
3. ED%: The effective period of braking action
4. Rmin: braking resistor minimum value (ohms)

Braking resistor		Protection degree	Dimensions (mm)			Weight
			W	H	d	(kg)
RFH 600 40R	S6F62	IP44	320	27	36	0.6
RFPD 750 DT 26R	S8T0CZ	IP44	200	70	106	1.7
RF 780 20R	S8SA28	IP44	155	27	36	0.26
RFH 165 720R	S8SA25	IP44	155	27	36	0.26
RF 300 DT 400R	S8T0CR	IP44	260	38	106	1.4
RF 220 T 250R	S8T0CP	IP44	300	27	36	0.5
RFH 600 160R	S6F64	IP44	320	27	36	0.6
RFPD 900 DT 100R	S8T0CM	IP44	260	70	106	2.2
RFPR 750 D 80R	S8SZ0	IP44	245	75	100	2.7
BRT 1K6 52R	S8SA30	IP20	580	140	110	4.2

6.6 Copy Unit (KB-BDI/VDI)

The copy unit is used to copy an inverter parameter setup to another inverter.
The copy unit saves time in applications with multiple inverters requiring the same parameter setup.

Copy Unit dimensions

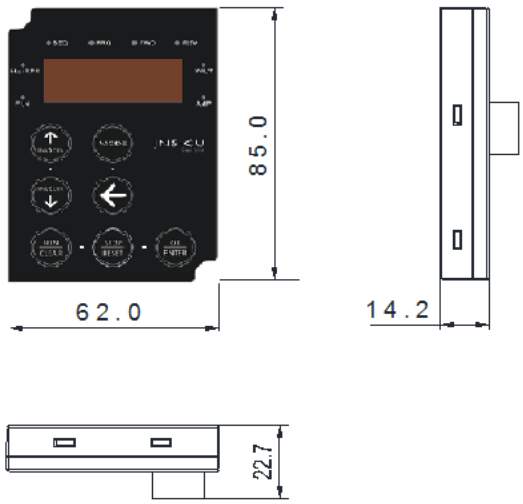

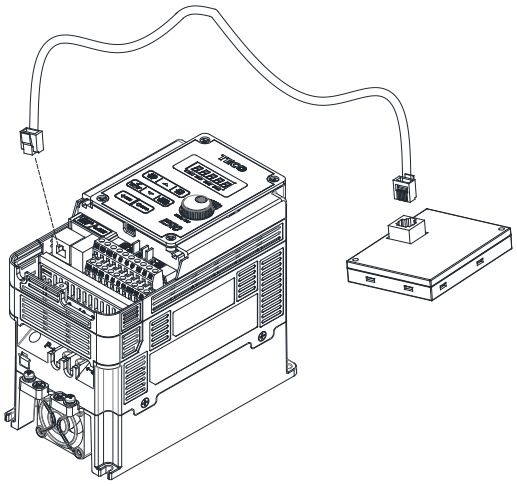

6.7 Communication options

(a) PROFIBUS communication interface module (EXP-PDP-BDI/VDI)
For wiring example and communication setup refer to EXP-PDP-BDI/VDI communication option manual.

(b) DEVICENET communication interface module (EXP-DN-BDI/VDI)
For wiring example and communication setup refer to EXP-DN-BDI/VDI communication option manual.

(c) CANopen communication interface module (EXP-CAN-BDI/VDI)
For wiring example and communication setup refer to EXP-CAN-BDI/VDI communication option manual.

(d) TCP-IP communication interface module (EXP-TCPIP-BDI/VDI)
For wiring example and communication setup refer to EXP-TCPIP-BDI/VDI communication option manual.

6.8 RJ45 to USB connecting Cable (1.8m)

Cable RJ45 to USB 1.8m has the function of converting USB communication format to RS485 to achieve the inverter communication control being similar with PC or other control equipment with USB port.

Exterior:

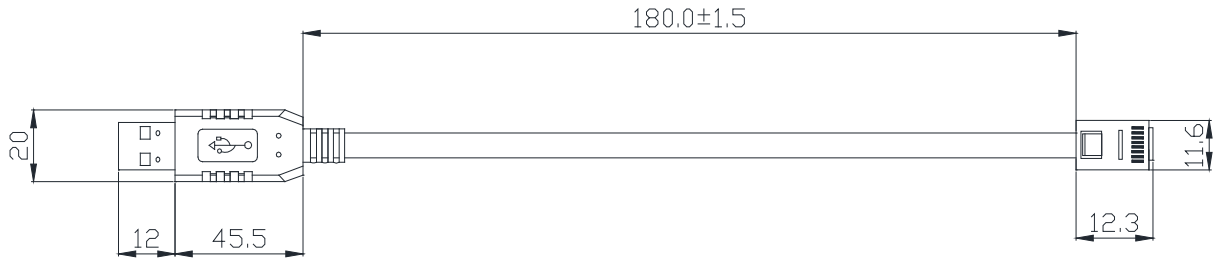

Connecting:

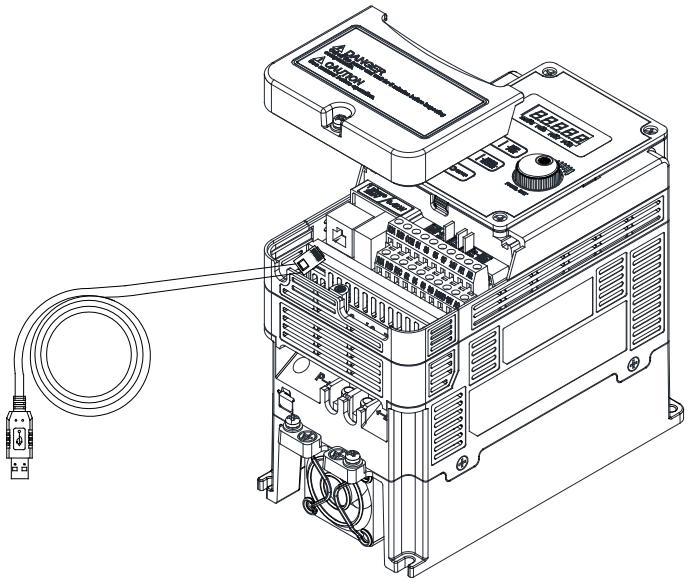

Appendix 1 BDI50 parameters setting list

Customer				Inverter Model			
Using Site				Contact Phone			
Address							
Parameter Code	Setting Content	Parameter Code	Setting Content	Parameter Code	Setting Content	Parameter Code	Setting Content
00-00		02-01		04-00		06-00	
00-01		02-02		04-01		06-01	
00-02		02-03		04-02		06-02	
00-03		02-04		04-03		06-03	
00-04		02-05		04-04		06-04	
00-05		02-06		04-05		06-05	
00-06		02-07		04-06		06-06	
00-07		02-08		04-07		06-07	
00-08		02-09		04-08		06-16	
00-09		02-10		04-09		06-17	
00-10		02-11		04-10		06-18	
00-11		02-12		04-11		06-19	
00-12		02-13		04-12		06-20	
00-13		02-14		04-13		06-21	
00-14		02-15		04-14		06-22	
00-15		02-16		04-15		06-23	
00-16		02-17		05-00		06-32	
00-17		02-18		05-01		06-33	
00-18		02-19		05-02		06-34	
00-19		03-00		05-03		06-35	
00-20		03-01		05-04		06-36	
01-00		03-02		05-05		06-37	
01-01		03-03		05-06		06-38	
01-02		03-04		05-07		06-39	
01-03		03-05		05-08		07-00	
01-04		03-06		05-17		07-01	
01-05		03-07		05-18		07-02	
01-06		03-08		05-19		07-03	
01-07		03-09		05-20		07-04	
01-08		03-10		05-21		07-05	
01-09		03-11		05-22		07-06	
01-10		03-12		05-23		07-07	
01-11		03-13		05-24		07-08	
01-12		03-14		05-25		07-09	
01-13		03-15		05-26		08-00	
01-14		03-16		05-27		08-01	
01-15		03-17		05-28		08-02	
01-16		03-18		05-29		08-03	
01-17		03-19		05-30		08-04	
01-18		03-20		05-31		08-05	
02-00		03-21		05-32		08-06	

Parameter Code	Setting Content	Parameter Code	Setting Content	Parameter Code	Setting Content	Parameter Code	Setting Content
08-07		11-00					
08-08		11-01					
08-09		11-02					
08-10		11-03					
08-11		11-04					
08-12		11-05					
08-13		11-06					
08-14		11-07					
08-15		11-08					
08-16		11-09					
08-17		11-10					
08-18		11-11					
09-00		11-13					
09-01		11-14					
09-02		11-15					
09-03		11-16					
09-04		11-17					
09-05		11-18					
09-06		11-19					
09-07		11-20					
09-08		12-00					
09-09		12-01					
09-10		12-02					
10-00		12-03					
10-01		12-04					
10-02		12-05					
10-03		13-00					
10-04		13-01					
10-05		13-02					
10-06		13-03					
10-07		13-04					
10-08		13-05					
10-09		13-06					
10-10		13-07					
10-11		13-08					
10-12							
10-13							
10-14							
10-15							
10-16							
10-17							
10-18							
10-19							
10-20							
10-21							
10-22							

Appendix-2 Instructions for UL

◆ Safety Precautions

⚠ DANGER

Electrical Shock Hazard

Do not connect or disconnect wiring while the power is on.

Failure to comply will result in death or serious injury

⚠ WARNING

Electrical Shock Hazard

Do not operate equipment with covers removed.

Failure to comply could result in death or serious injury.

The diagrams in this section may show drives without covers or safety shields to show details. Be sure to reinstall covers or shields before operating the drives and run the drives according to the instructions described in this manual.

Always ground the motor-side grounding terminal.

Improper equipment grounding could result in death or serious injury by contacting the motor case.

Do not touch any terminals before the capacitors have fully discharged.

Failure to comply could result in death or serious injury.

Before wiring terminals, disconnect all power to the equipment. The internal capacitor remains charged even after the power supply is turned off. After shutting off the power, wait for at least the amount of time specified on the drive before touching any components.

Do not allow unqualified personnel to perform work on the drive.

Failure to comply could result in death or serious injury.

Installation, maintenance, inspection, and servicing must be performed only by authorized personnel familiar with installation, adjustment, and maintenance of AC drives.

Do not perform work on the drive while wearing loose clothing, jewelry, or lack of eye protection.

Failure to comply could result in death or serious injury.

Remove all metal objects such as watches and rings, secure loose clothing, and wear eye protection before beginning work on the drive.

Do not remove covers or touch circuit boards while the power is on.

Failure to comply could result in death or serious injury.

Fire Hazard

Tighten all terminal screws to the specified tightening torque.

Loose electrical connections could result in death or serious injury by fire due to overheating of electrical connections.

Do not use an improper voltage source.

Failure to comply could result in death or serious injury by fire.

Verify that the rated voltage of the drive matches the voltage of the incoming power supply before applying power.

Do not use improper combustible materials.

Failure to comply could result in death or serious injury by fire.

Attach the drive to metal or other noncombustible material.

NOTICE

Observe proper electrostatic discharge procedures (ESD) when handling the drive and circuit boards.
Failure to comply may result in ESD damage to the drive circuitry.

Never connect or disconnect the motor from the drive while the drive is outputting voltage.
Improper equipment sequencing could result in damage to the drive.

Do not use unshielded cable for control wiring.
Failure to comply may cause electrical interference resulting in poor system performance. Use shielded twisted-pair wires and ground the shield to the ground terminal of the drive.

NOTICE

Do not modify the drive circuitry.
Failure to comply could result in damage to the drive and will void warranty.
Gefran is not responsible for any modification of the product made by the user. This product must not be modified.

Check all the wiring to ensure that all connections are correct after installing the drive and connecting any other devices.
Failure to comply could result in damage to the drive.

◆ UL Standards

The UL/cUL mark applies to products in the United States and Canada and it means that UL has performed product testing and evaluation and determined that their stringent standards for product safety have been met. For a product to receive UL certification, all components inside that product must also receive UL certification.

UL/cUL Mark

◆ UL Standards Compliance

This drive is tested in accordance with UL standard UL508C and complies with UL requirements. To ensure continued compliance when using this drive in combination with other equipment, meet the following conditions:

- **Installation Area**

Do not install the drive to an area greater than pollution severity 2 (UL standard).

- **Main Circuit Terminal Wiring**

UL approval requires crimp terminals when wiring the drive's main circuit terminals. Use crimping tools as specified by the crimp terminal manufacturer. Gefran recommends crimp terminals made by NICHIFU for the insulation cap.
The table below matches drives models with crimp terminals and insulation caps. Orders can be placed with a Gefran representative or directly with the Gefran sales department.

Closed-Loop Crimp Terminal Size

Drive Model	Wire Gauge mm², (AWG)		Terminal	Crimp Terminal	Tool	Insulation Cap
BDI50	R/L1 □S/L2 □T/L3	U/T1 □V/T2 □W/T3	Screws	Model No.	Machine No.	Model No.
1004	1.3 (16)		M3.5	R2-3.5	Nichifu NH 1 / 9	TIC 2
1007	2.1 (14)		M3.5	R2-3.5	Nichifu NH 1 / 9	TIC 2
2015	3.3 (12)		M4	R3.5-4	Nichifu NH 1 / 9	TIC 3.5
2022	5.3 (10)		M4	R5.5-4	Nichifu NH 1 / 9	TIC 3.5
3037	5.3 (10)		M4	R5.5-4	Nichifu NH 1 / 9	TIC 5.5
4055 4075	8.4 (14)		M5	R8-5	Nichifu NH 1 / 9	TIC 8
2007	2.1 (14)		M4	R3.5-4	Nichifu NH 1 / 9	TIC 2
2015	2.1 (14)		M4	R3.5-4	Nichifu NH 1 / 9	TIC 2
2022	2.1 (14)		M4	R3.5-4	Nichifu NH 1 / 9	TIC 2
3037	2.1 (14)		M4	R2-3.5	Nichifu NH 1 / 9	TIC 2
3055 4075 4110	8.4 (8)		M5	R8-5	Nichifu NH 1 / 9	TIC 8

◆Type 1

During installation, all conduit hole plugs shall be removed, and all conduit holes shall be used.

Recommended Input Fuse Selection

Drive Model BDI50-…-2M	Fuse Type Manufacturer: Bussmann Model	Fuse Ampere Rating (A)
	200 V Class Single-Phase Drives	
1004	Bussmann 10CT/16CT	690V 10A / 690V 16A
1007	Bussmann 16CT/20CT	690V 16A / 690V 20A
2015	Bussmann 30FE	690V 30A
2022	Bussmann 50FE	690V 50A

Drive Model BDI50-…-2T	Fuse Type Manufacturer: Bussmann Model	Fuse Ampere Rating (A)
	200 V Class Three-Phase Drives	
1007	Bussmann 10CT	690V 10A
2015	Bussmann 16CT	690V 16A
2022	Bussmann 20CT	690V 20A
3037	Bussmann 50FE	690V 50A
4055	Bussmann 63CT/100FE	690V 63A
4075	Bussmann 80CT/100FE	690V 80A/690V 100A

Drive Model BDI50-…-4	Fuse Type Manufacturer: Bussmann Model	Fuse Ampere Rating (A)
	400 V Class Three-Phase Drives	
2007	Bussmann 10CT	690V10A
2015	Bussmann 16CT	690V 16A
2022	Bussmann 20CT	690V 20A
3037	Bussmann 25ET	690V 25A
3055	Bussmann 40FE	690V 40A
4075	Bussmann 50ET	690V 50A
4110	Bussmann 63ET	690V 63A

■ Field Wiring Terminals

All input and output field wiring terminals not located within the motor circuit shall be marked to indicate the proper connections that are to be made to each terminal and indicate that copper conductors, rated 80°C are to be used.

■ Drive Short-Circuit Rating

This drive has undergone the UL short-circuit test, which certifies that during a short circuit in the power supply the current flow will not rise above value. Please see electrical ratings for maximum voltage and table below for current.

- The MCCB and breaker protection and fuse ratings (refer to the preceding table) shall be equal to or greater than the short-circuit tolerance of the power supply being used.
- Suitable for use on a circuit capable of delivering not more than (A) RMS symmetrical amperes for (Hp) in 240 / 480 V class drives motor overload protection.

Horse Power (Hp)	Current (A)	Voltage (V)
1 - 50	5,000	240 / 480

◆ Drive Motor Overload Protection

Set parameter 02-01 (motor rated current) to the appropriate value to enable motor overload protection. The internal motor overload protection is UL listed and in accordance with the NEC and CEC.

■ 02-01 Motor Rated Current

Setting Range: Model Dependent
Factory Default: Model Dependent

Set 02-01 to the full load amps (FLA) stamped on the nameplate of the motor.

■ 08-05 Motor Overload Protection Selection

The drive has an electronic overload protection function (OL1) based on time, output current, and output frequency, which protects the motor from overheating. The electronic thermal overload function is UL-recognized, so it does not require an external thermal overload relay for single motor operation.

This parameter selects the motor overload curve used according to the type of motor applied.

Overload Protection Settings

Setting	Description
XXXX0	Disabled
XXXX1	Enabled

Sets the motor overload protection function in 08-05 according to the applicable motor.

Setting 08-05 = XXXX0. Disables the motor overload protection function when two or more motors are connected to a single inverter. Use an alternative method to provide separate overload protection for each motor such as connecting a thermal overload relay to the power line of each motor.

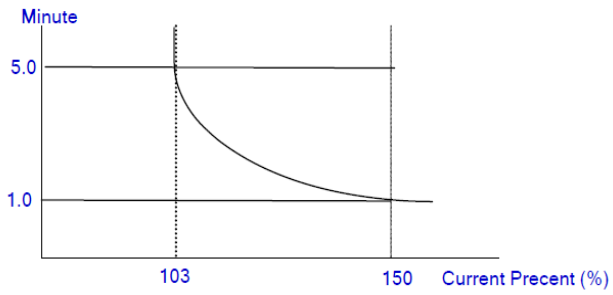

Motor Overload Protection Time

■ 08-06 Motor Overload Operation Selection

Setting	Description
0	Free Run to Stop (default setting)
1	Alarm Only

Appendix 3 BDI50 Communication protocol

Modbus communication protocol

1. Communication Data Frame

BDI50 series inverter can be controlled by a PC or other controller with the Communication protocol, Modbus ASCII Mode & Mode RTU, RS485 or RS232. Frame length maximum 80 bytes.

1.1 Hardware installation

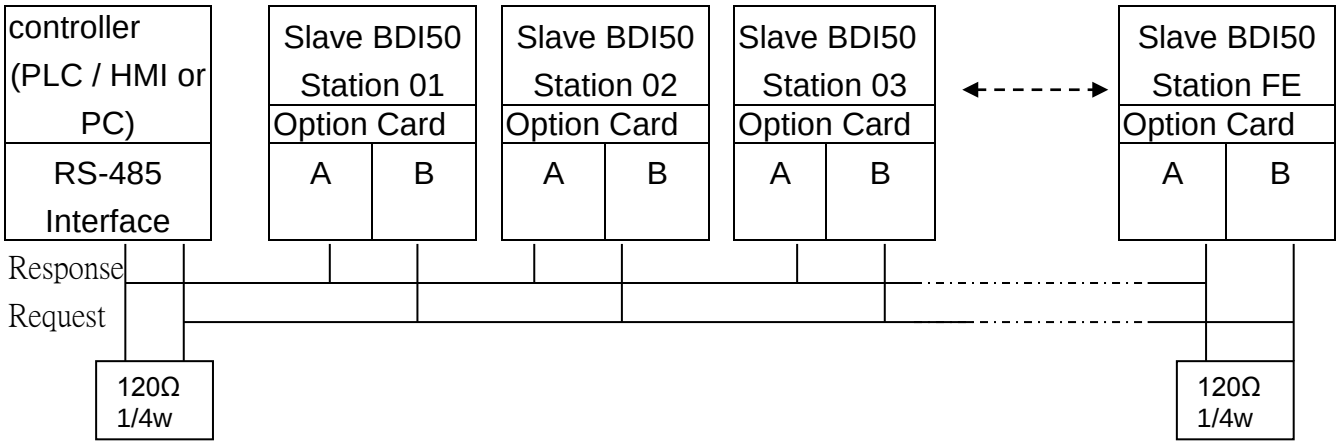

** The network is terminated at each end with an external terminating resistor (120Ω，1/4w)**

1.2 Data format ASCII MODE

STX(3AH)	Start bit = 3AH
Address Hi	Communication Address(Station):
Address Lo	2-digit ASCII Code
Function Hi	Function Code (command):
Function Lo	2-digit ASCII Code
Command Start Address	Command Start byte:
Command Start Address	4-digit ASCII Code
Command Start Address	
Command Start Address	
Data length	The length of the command:
Data length	4-digit ASCII Code
Data length	
Data length	
LRC Check Hi	LRC Check Code:
LRC Check Lo	2-digit ASCII Code
END Hi	End Byte :
END Lo	END Hi = CR(0DH), END Lo= LF(0AH)

MASTER(PLC etc.) send request to SLAVE, whereas response to MASTER.
The signal receiving is illustrated here.
The data length is varied with the command(Function).

SLAVE Address
Function Code
DATA
CRC CHECK
Signal Interval

** The interval should be maintained at 10ms between command signal and request.

1.3 SLAVE(Address)

00H : Broadcast to all the drivers
01H : to the No.01 Drivers
0FH : to the No.15 Drivers
10H : to the No.16 Drivers
and so on....，Max to 32(20H)

1.4 Function Code

03H : Read the register contents
06H : write a WORD to register
08H : Loop test
10H : write several data to register(complex number register write)

2. CMS(Checksum and time-out definition)

2.1 LRC CHECK

Ex:	ADDRESS	01H
	FUNCTION	03H
	COMMAND	01H
		00H
	DATA LENGTH	0AH

0FH----------true complement

Checksum	=	F1H
CS(H)	=	46H (ASCII)
CS(L)	=	31H (ASCII)

2.2 CRC CHECK:

CRC Check Code is calculated from SLAVE Address to end of the data. The calculation method is illustrated as follow:

(1). Load a 16-bit register with FFFF hex (all's1).Call this the CRC register.

(2). Exclusive OR the first 8-bit byte of the message with the low-order byte of the 16-bit CRC register, putting the result in the CRC register.

(3). Shift the CRC register one bit to the right (toward the LSB), Zero-filling the MSB, Extract and examines the LSB.

(4). (If the LSB was 0): Repeat Steps(3)(another shift). (If the LSB was 1): Exclusive OR the CRC register with the polynomial value A001 hex (1010 0000 0000 0001), putting the result in the CRC register.

(5). Repeat Steps (3) and (4) until 8 shifts been performed. When this is done, a complete 8-bit byte will be processed .

(6). Repeat Steps (2) through (5) for next 8-bit byte of the message, Continue doing this until all bytes have been processed. The final content of the CRC register is the CRC value. Placing the CRC into the message: When the 16-bit CRC (2 8-bit bytes) is transmitted in the message, the Low-order byte will be transmitted first, followed by the high-order byte, For example, if the CRC value is 1241 hex, the CRC-16 Upper put the 41h, the CRC-16 Lower put the 12h.

- **CRC calculation application program**

```
UWORD ch_sum (UBYTE long , UBYTE *rxdbuff)
{
    BYTE i = 0;
    UWORD wkg = 0xFFFF;
    while (long--)
    {
        wkg ^= rxdbuff++;
        for (i = 0 ; i < 8; i++)
        {
            if (wkg & 0x0001)
            {
                wkg = (wkg >> 1) ^ 0xa001;
            }
            else
            {
                wkg = wkg >> 1;
            }
        }
    }
    return(wkg);
}
```

3. Error code

ASCII Mode

STX	‘:’
Address	‘0’
	‘1’
Function	‘8’
	‘6’
Exception code	‘5’
	‘1’
LRC Check	‘2’
	‘8’
END	‘CR’
	‘LF’

RTU Mode

SLAVE Address		02H
Function		83H
Exception code		52H
CRC-16	High	C0H
	Low	CDH

Under communication linking, the driver responses the Exception Code and send Function Code AND 80H to main system if there is error happened.

Error Code	Description
51	Function Code Error
52	Address Error
53	Data Amount Error
54	DATA Over Range
55	Writing Mode Error

4. Inverter Control

4.1 Command Data (Readable and Writable)

Register No.			Bit	Content
2500H	Reserved			
2501H				Operation Signal
			0	Operation Command 1 : Run 0 : Stop
			1	Reverse Command 1 :Reverse 0 :Forward
			2	Abnormal 1 : EFO (Note)
			3	Fault Reset 1 : Reset
			4	Jog Forward Command 1 : Jog Forward
			5	Jog Reverse Command 1 : Jog Reverse
			6	Multi-function CommandS1 1 :“ON” 0:“OFF”
			7	Multi-function CommandS2 1 :“ON” 0:“OFF”
			8	Multi-function CommandS3 1 :“ON” 0:“OFF”
			9	Multi-function CommandS4 1 :“ON” 0:“OFF”
			A	Multi-function CommandS5 1 :“ON” 0:“OFF”
			B	Reserved
			C	Relay R1 1 :“ON” 0:“OFF”
			D	Reserved
			E~F	Reserved
2502H			Frequency Command	
2503~251FH			Reserved	

Note 1 : Write in zero for Not used BIT, do not write in data for the reserved register.

Note 2: Bit 2 of 2501H is not for fault indication. EFO is for “external abnormity.
”External abnormity” is any event not related to drive operation which can be defined externally by the user/machine.
When there is external abnormity, user may change the bit value from 0 to 1 through communication, inverter will stop according to the setting in 07-09 (decel. to stop or coast to stop).

4.2 Monitor Data (Only for reading)

Register No.			Bit	Content
2520H				
			0	Operation state 1 : Run 0 : Stop
			1	Direction state 1 : Reverse 0 : Forward
			2	Inverter operation prepare state 1:ready 0 : unready
			3	Abnormal 1 : Abnormal
			4	DATA setting error 1 : Error
			5-F	Reserved

Register No.	Content				
2521H		**abnormity**			
		00	The inverter is normal	24	Over voltage during decelerating(OV-C)
		01	Inverter over heat(OH)	25	Inverter over heat during running(OH-C)
		02	Over current at stop(OC)	26	Stop at 0 speed(STP0)
		03	Under voltage(LV)	27	Direct start malfunction(STP1)
		04	Over voltage(OV)	28	Control panel emergency stop(STP2)
		05	Reserved	29	Keypad operation error)(Err1)
		06	External BB(bb)	30	Parameter setting error(Err2)
		07	CPU error by external signal(CTE)	31	Analog transferred error(Err4)
		08	PID feedback signal lost(PDER)	32	Parameter changed during Communication (Err5)
		09	EEPROM abnormal(EPR)	33	Communication failure(Err6) (Note)
		10	Parameters auto measure error(ATER)	34	Parameter setting error(Err7)
		11	Over Torque(OL3)	35	Restore factory setting error(Err8)
		12	Inverter over load**(OL2)**	36	Reserved
		13	Motor over load(OL1)	37	Reserved
		14	External communication error(EFO)	38	Parameters copy error via copy unit(EPR1)
		15	External stop(E.S)	39	Parameters copy incorrect via copy unit(EPR2)
		16	Parameters locked(LOC)	40	Inverter over speed(OVSP)
		17	Reserved	41	Input phase lost(PF)
		18	Over current at constant speed (OC-C)	42	Horsepower setting error(HPERR)
		19	Over current during accelerating (OC-A)	43	Reserved
		20	Over current during decelerating (OC-D)	44	Motor temperature overheat error(OH4)
		21	Over current at starting to run (OC-S)	45	Motor temperature overheat alarm(OH3)
		22	Reserved	46	Output current reaches current limit level(CL)
		23	Under voltage during running(LV-C)		

Register No.					
			Sequence input status		
2522H			0	Terminal S1	1 :“ON” 0:“OFF”
			1	Terminal S2	1 :“ON” 0:“OFF”
			2	Terminal S3	1 :“ON” 0:“OFF”
			3	Terminal S4	1 :“ON” 0:“OFF”
			4	Terminal S5	1 :“ON” 0:“OFF”
			5	Terminal S6	1 :“ON” 0:“OFF”
			Contact output		
			6	Relay R1	1 :“ON” 0:“OFF”
			7	Relay R2	1 :“ON” 0:“OFF”
			9~F	Reserved	

(Note) Err6 error: Inverter gets communication error with external devices.

When inverter gets communication error:

If the controller writes “1” to “2501H bit 2”, will appear “EFO” on display.

If the controller does not write “1” to “2501H bit 2”, will appear “Err6” on display

Register No.	Content
2523H	frequency command(100/1Hz)
2524H	Output frequency (100/1Hz)
2525H	Output voltage command (10/1V)
2526H	DC voltage command (1/1V)
2527H	Output current (10/1A)
2528H	reserved
2529H	reserved
252AH	PID feedback (100% / fmax , 10/1%)
252BH	PID input (100% / fmax, 10/1%)
252CH	TM2 AVI input value (1000 / 10V) *1
252DH	TM2 ACI input value (1000 / 10V) *1
252EH	reserved
252FH	BDI50 identification: 0x0110

4.3 Read the data in the holding register [03H]

Master unit reads the contents of the holding register with the continuous number for the specified quantity.

Note:1. Limit number of read data，RTU: 37，ASCII:17.
2. Can only Continuous read the address of the same Group
3. Read data Quantity≥1.

(Example) Read the SLAVE station No: 01 ,BDI50 drive's frequency command.

ASCII Mode

Instruction Message

3AH	STX
30H	SLAVE Address
31H	
30H	Function Code
33H	
32H	Start Address
35H	
32H	
33H	
32H	Quantity
35H	
30H	
31H	
?	LRC CHECK
?	
0DH	END
0AH	

Response Message (Normal)

3AH	STX
30H	SLAVE Address
31H	
30H	Function Code
33H	
30H	DATA Number
32H	
31H	First holding register
37H	
37H	
30H	
?	LRC CHECK
?	
0DH	END
0AH	

Response (Fault)

3AH	STX
30H	SLAVE Address
31H	
38H	Function Code
33H	
35H	Error Code
32H	
?	LRC CHECK
?	
0DH	END
0AH	

RTU Mode

Instruction Message

SLAVE Address		01H
Function Code		03H
Start Address	High	25H
	Low	23H
Quantity	High	00H
	Low	01H
CRC-16	High	7EH
	Low	CCH

Response Message (Normal)

SLAVE Address		01H
Function Code		03H
DATA Number		02H
First holding register	High	07H
	Low	D0H
CRC-16	High	BBH
	Low	E8H

Response(Fault)

SLAVE Address		01H
Function Code		83H
Error Code		52H
CRC-16	High	C0H
	Low	CDH

4.4 LOOP BACK testing [08H]

The function code checks communication between MASTER and SLAVE, the Instruction message is returned as a response message without being changed. Any values can be used for test codes or data.

ASCII Mode

Instruction Message

3AH	STX
30H	SLAVE Address
31H	
30H	Function Code
38H	
30H	Test Code
30H	
30H	
30H	
41H	DATA
35H	
33H	
37H	
31H	LRC CHECK
42H	
0DH	END
0AH	

Response Message (Normal)

3AH	STX
30H	SLAVE Address
31H	
30H	Function Code
38H	
30H	Test Code
30H	
30H	
30H	
41H	DATA
35H	
33H	
37H	
31H	LRC CHECK
42H	
0DH	END
0AH	

Response(Fault)

3AH	STX
30H	SLAVE Address
31H	
38H	Function Code
38H	
32H	Error Code
30H	
37H	LRC CHEC
35H	
0DH	END
0AH	

RTU Mode

Instruction Message

SLAVE Address		01H
Function Code		08H
Test Code	High	00H
	Low	00H
DATA	High	A5H
	Low	37H
CRC-16	High	DAH
	Low	8DH

Response Message (Normal)

SLAVE Address		01H
Function Code		08H
Test Code	High	00H
	Low	00H
DATA	High	A5H
	Low	37H
CRC-16	High	DAH
	Low	8DH

Response(Fault)

SLAVE Address		01H
Function Code		88H
Error Code		20H
CRC-16	High	47H
	Low	D8H

4.5 Write holding register [06H]

Specified data are written into the several specified holding registers from the Specified respectively.
(Example)Set SLAVE station No:01, write BDI50 drive frequency reference 60.0HZ.

ASCII Mode

Instruction Message

3AH	STX
30H	SLAVE Address
31H	
30H	Function Code
36H	
32H	Start Address
35H	
30H	
32H	
31H	DATA
37H	
37H	
30H	
?	LRC CHECK
?	
0DH	END
0AH	

Response Message (Normal)

3AH	STX
30H	SLAVE Address
31H	
30H	Function Code
36H	
32H	Start Address
35H	
30H	
32H	
31H	DATA
37H	
37H	
30H	
?	LRC CHECK
?	
0DH	END
0AH	

Response(Fault)

3AH	STX
30H	SLAVE Address
31H	
38H	Function Code
36H	
35H	Error Code
32H	
?	LRC CHECK
?	
0DH	END
0AH	

RTU Mode

Instruction Message

SLAVE Address		01H
Function Code		06H
Start Address	High	25H
	Low	02H
DATA	High	17H
	Low	70H
CRC-16	High	2DH
	Low	12H

Response Message (Normal)

SLAVE Address		01H
Function Code		06H
Start Address	High	25H
	Low	02H
DATA	High	17H
	Low	70H
CRC-16	High	2DH
	Low	12H

Response(Fault)

SLAVE Address		01H
Function Code		86H
Error Code		52H
CRC-16	High	C3H
	Low	9DH

4.6 Write in several holding registers [10H]

Specified data are written into the several specified holding registers from the Specified number respectively.

Note:1. Limit number of read data，RTU: 35，ASCII:15.

2. Can only Continuous read the address of the same Group.

3. Read data Quantity≥1.

(Example) Set SLAVE station No:01, BDI50 drive as forward run at frequency reference 60.0HZ.

ASCII Mode

Instruction Message

3AH	STX
30H	SLAVE Address
31H	
31H	Function Code
30H	
32H	Start Address
35H	
30H	
31H	
30H	Quantity
30H	
30H	
32H	
30H	DATA Number *
34H	
30H	First DATA
30H	
30H	
31H	
31H	Next DATA
37H	
37H	
30H	
?	LRC CHECK
?	
0DH	END
0AH	

Response Message (Normal)

3AH	STX
30H	SLAVE Address
31H	
31H	Function Code
30H	
32H	Start Address
35H	
30H	
31H	
30H	Quantity
30H	
30H	
32H	
?	LRC CHECK
?	
0DH	END
0AH	

Response(Fault)

3AH	STX
30H	SLAVE Address
31H	
39H	Function Code
30H	
35H	Error Code
32H	
?	LRC CHECK
?	
0DH	END
0AH	

RTU Mode

Instruction Message

SLAVE Address		01H
Function Code		10H
Start Address	High	25H
	Low	01H
Quantity	High	00H
	Low	02H
DATA Number *		04H
First DATA	High	00H
	Low	01H
Next DATA	High	17H
	Low	70H
CRC-16	High	CBH
	Low	26H

* DATA Numbers are the actual number timers 2

Response Message (Normal)

SLAVE Address		01H
Function Code		10H
Start Address	High	25H
	Low	01H
Quantity	High	00H
	Low	02H
CRC-16	High	1BH
	Low	04H

Response(Fault)

SLAVE Address		01H
Function Code		90H
Error Code		52H
CRC-16	High	CDH
	Low	FDH

5. Comparison list between parameter and register

Note:
Parameter register No.: GGnnH, “GG”means Group number, “nn” means Parameter number for example: the address of Pr 08-03 is 0803H. the address of Pr 10-11 is 0A0BH.

Register No.	Function	Register No.	Function	Register No.	Function
Group00		**Group01**		**Group02**	
0000H	00-00	0100H	01-00	0200H	02-00
0001H	00-01	0101H	01-01	0201H	02-01
0002H	00-02	0102H	01-02	0202H	02-02
0003H	00-03	0103H	01-03	0203H	02-03
0004H	00-04	0104H	01-04	0204H	02-04
0005H	00-05	0105H	01-05	0205H	02-05
0006H	00-06	0106H	01-06	0206H	02-06
0007H	00-07	0107H	01-07	0207H	02-07
0008H	00-08	0108H	01-08	0208H	02-08
0009H	00-09	0109H	01-09	0209H	02-09
000AH	00-10	010AH	01-10	020AH	02-10
000BH	00-11	010BH	01-11	020BH	02-11
000CH	00-12	010CH	01-12	020CH	02-12
000DH	00-13	010DH	01-13	020DH	02-13
000EH	00-14	010EH	01-14	020EH	02-14
000FH	00-15	010FH	01-15	020FH	02-15
0010H	00-16	0110H	01-16	0210H	02-16
0011H	00-17	0111H	01-17	0211H	02-17
0012H	00-18	0112H	01-18	0212H	02-18
0013H	00-19			0213H	02-19
0014H	00-20				

Register No.	Function	Register No.	Function	Register No.	Function
Group03		**Group04**		**Group05**	
0300H	03-00	0400H	04-00	0500H	05-00
0301H	03-01	0401H	04-01	0501H	05-01
0302H	03-02	0402H	04-02	0502H	05-02
0303H	03-03	0403H	04-03	0503H	05-03
0304H	03-04	0404H	04-04	0504H	05-04
0305H	03-05	0405H	04-05	0505H	05-05
0306H	03-06	0406H	04-06	0506H	05-06
0307H	03-07	0407H	04-07	0507H	05-07
0308H	03-08	0408H	04-08	0508H	05-08
0309H	03-09	0409H	04-09	0509H	05-09
030AH	03-10	040AH	04-10	050AH	05-10
030BH	03-11	040BH	04-11	050BH	05-11
030CH	03-12	040CH	04-12	050CH	05-12
030DH	03-13	040DH	04-13	050DH	05-13
030EH	03-14	040EH	04-14	050EH	05-14
030FH	03-15	040FH	04-15	050FH	05-15
0310H	03-16			0510H	05-16
0311H	03-17			0511H	05-17
0312H	03-18			0512H	05-18
0313H	03-19			0513H	05-19
0314H	03-20			0514H	05-20
0315H	03-21			0515H	05-21
				0516H	05-22
				0517H	05-23
				0518H	05-24
				0519H	05-25
				051AH	05-26
				051BH	05-27
				051CH	05-28
				051DH	05-29
				051EH	05-30
				051FH	05-31
				0520H	05-32

Register No.	Function	Register No.	Function	Register No.	Function
Group06		**Group07**		**Group08**	
0600H	06-00	0700H	07-00	0800H	08-00
0601H	06-01	0701H	07-01	0801H	08-01
0602H	06-02	0702H	07-02	0802H	08-02
0603H	06-03	0703H	07-03	0803H	08-03
0604H	06-04	0704H	07-04	0804H	08-04
0605H	06-05	0705H	07-05	0805H	08-05
0606H	06-06	0706H	07-06	0806H	08-06
0607H	06-07	0707H	07-07	0807H	08-07
0608H	06-08	0708H	07-08	0808H	08-08
0609H	06-09	0709H	07-09	0809H	08-09
060AH	06-10			080AH	08-10
060BH	06-11			080BH	08-11
060CH	06-12			080CH	08-12
060DH	06-13			080DH	08-13
060EH	06-14			080EH	08-14
060FH	06-15			080FH	08-15
0610H	06-16			0810H	08-16
0611H	06-17				
0612H	06-18				
0613H	06-19				
0614H	06-20				
0615H	06-21				
0616H	06-22				
0617H	06-23				
0618H	06-24				
0619H	06-25				
061AH	06-26				
061BH	06-27				
061CH	06-28				
061DH	06-29				
061EH	06-30				
061FH	06-31				
0620H	06-32				
0621H	06-33				
0622H	06-34				
0623H	06-35				

Register No.	Function	Register No.	Function	Register No.	Function
Group06		Group07		Group08	
0624H	06-36				
0625H	06-37				
0626H	06-38				
0627H	06-39				

Register No.	Function	Register No.	Function	Register No.	Function
Group09		Group10		Group11	
0900H	09-00	0A00H	10-00	0B00H	11-00
0901H	09-01	0A01H	10-01	0B01H	11-01
0902H	09-02	0A02H	10-02	0B02H	11-02
0903H	09-03	0A03H	10-03	0B03H	11-03
0904H	09-04	0A04H	10-04	0B04H	11-04
0905H	09-05	0A05H	10-05	0B05H	11-05
0906H	09-06	0A06H	10-06	0B06H	11-06
0907H	09-07	0A07H	10-07	0B07H	11-07
0908H	09-08	0A08H	10-08	0B08H	11-08
0909H	09-09	0A09H	10-09	0B09H	11-09
090AH	09-10	0A0AH	10-10	0B0AH	11-10
		0A0BH	10-11	0B0BH	11-11
		0A0CH	10-12	0B0CH	11-12
		0A0DH	10-13	0B0DH	11-13
		0A0EH	10-14	0B0EH	11-14
		0A0FH	10-15	0B0FH	11-15
		0A10H	10-16	0B10H	11-16
		0A11H	10-17	0B11H	11-17
		0A12H	10-18	0B12H	11-18
		0A13H	10-19	0B13H	11-19
		0A14H	10-20	0B14H	11-20
		0A15H	10-21		
		0A16H	10-22		

Register No.	Function	Register No.	Function	Register No.	Function
Group12		Group13			

0C00H	12-00	0D00H	13-00		
0C01H	12-01	0D01H	13-01		
0C02H	12-02	0D02H	13-02		
0C03H	12-03	0D03H	13-03		
0C04H	12-04	0D04H	13-04		
0C05H	12-05	0D05H	13-05		
		0D06H	13-06		
		0D07H	13-07		
		0D08H	13-08		

BACnet communication protocol

1. BACnet Protocol Descriptions

BACnet is in compliance with four-layer of seven-layer structure models in OSI (Open Systems Interconnection) of International Standard Organization (ISO). These four-layer structure models are application layer, network layer, data link layer and physical layer. Besides, BACnet is definced by the view of standard “object” and “property.” All BACnet devices are controlled via the property of objects. Every controller with BACnet devices is considered an object collector so that every controller device can execute different kinds of functions of objects to achieve the communication control and monitor control.

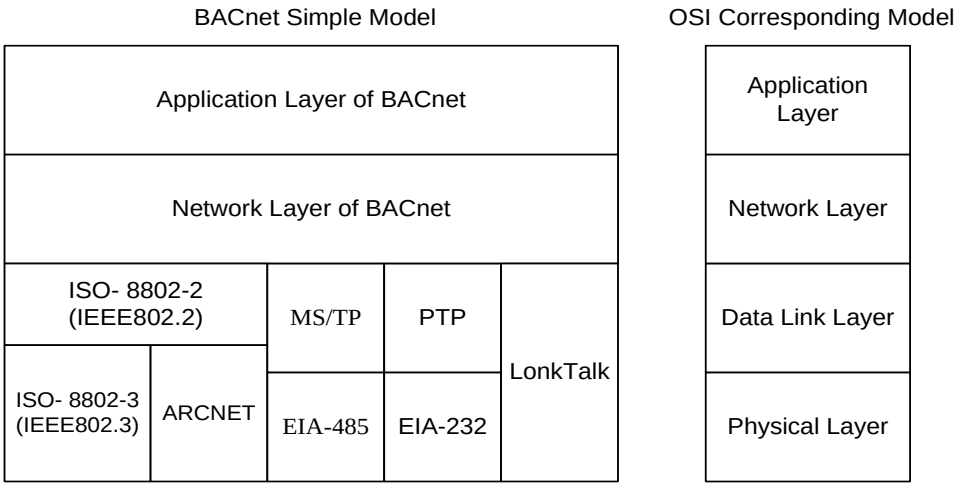

2. BACnet Services

Services provide some commands to save or control information and some functions to achieve the purpose of monitoring and control. Namely, one BACnet device receive certain information or command to complete specific work from other BACnet device so the two devices need to support the same service to complete communication. To complete the exchange of these service messages, these communication requirements are specified in the communication protocol of application layer by BACnet. Thus, services are parts of the communication protocol data unit (PDU) in the application layer and build the communication modes via the relationship of Server – Client. Client will send the message of service requirements to Server and Server needs to respond to Client to execute this service. Refer to the following figure.

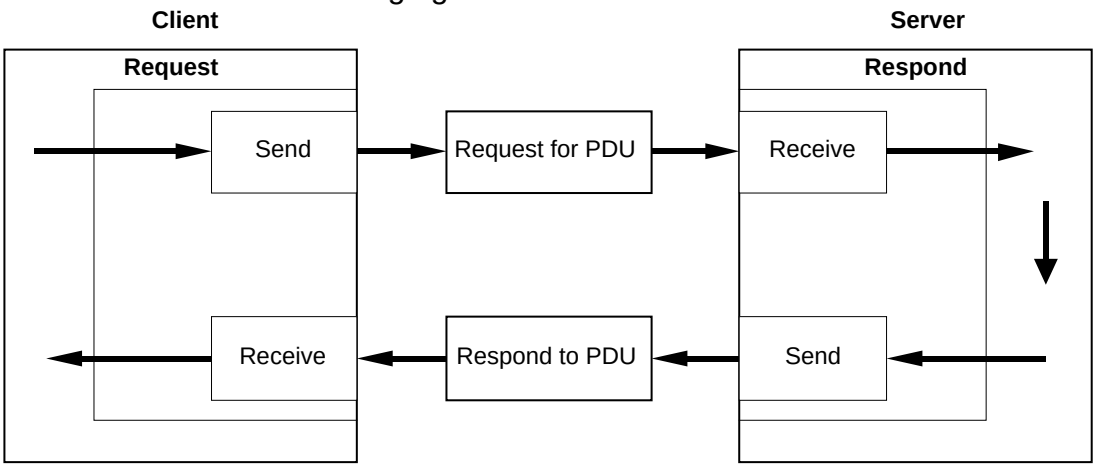

All BACnet devices have the application programs to manage the requirements of device motion and executing services. Take work station for example, the application program needs to keep the display value of every input so it requires sending the service request to the object of other device to update the display value of input. The application program of the device needs to respond to the service requirements. Refer to the following figure.

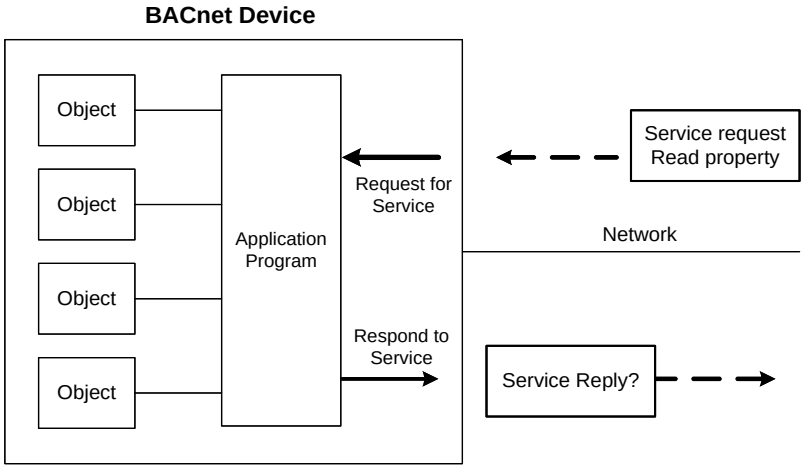

3. BACnet Protocol Structure

BACnet is the communication protocol by way of protocol stack so the pocket is composed of stacked layer types. Refer to the following figure.

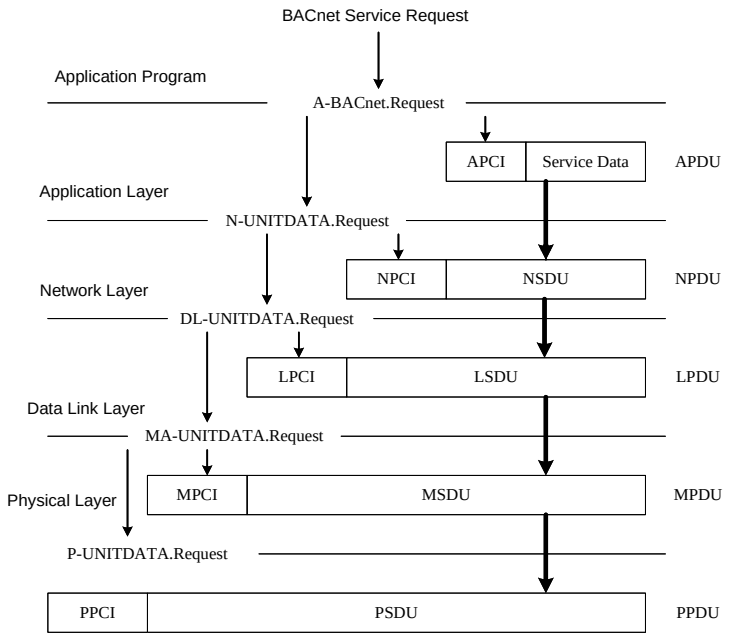

When application program sends the BACnet service request for the pocket, it requires requesting for executing BACnet request program in the application layer via application program interface. The requirements of the program are sent to the application layer and application protocol data unit (APDU) consists of Application Protocol Control Information (APCI) and Servie Data of application program. Then APDU passes its messages downward to BACnet request program in the network layer. APDU becomes Network Layer Protocol Data Unit (NPDU) composed of Network Service Data Unit (NSDU) and Network Protocol Control Information (NPCI). And so forth for the data link layer and physical layer to complete the full service for the packet.

4. BACnet Specifications

Inverter BDI50 model is built-in standard BACnet MS/TP communication protocol structure to meet the demand of automatic communication equipment. Control or monitor BDI50 via BACnet to be allowable to read and modify specific parameter. BDI50 includes the following supports of standard objects:

- **Inverter Objects**
- **Analog Input**
- **Analog Output**
- **Analog Value**
- **Digital Input**
- **Digital Output**
- **Digital Value**

Refer to Table 3.1 for BDI50 supporting the property information of object classification. User can collect related properties of objects required via the dedicated communication software of BACnet to give control or monitor command for each object.

Table 3.1 Object and property supporting list

Property	Inverter (DEV)	Analog Input (AI)	Analog Output (AO)	Analog Value (AV)	Digital Input (BI)	Digital Output (BO)	Digital Value (BV)
Object_Identifier	V	V	V	V	V	V	V
Object_Name	V	V	V	V	V	V	V
Object_Type	V	V	V	V	V	V	V
System_Status	V						
Vendor_Name	V						
Vendor_ Identifier	V						
Model_Name	V						
Firmware_Revision	V						
Applocation_Software_Supported	V						
Protocol_Version	V						
Protocol_Revision	V						
Protocol_Services_Supported	V						
Protocol_Object_Type_Supported	V						
Object_List	V						
Max_APDU_Length_Accepted							
Segmentation_Supported							
APDU_Timeout							
Number_Of_APDU_Retries							
Max_Masters	V						
Max_Info_Frames	V						
Device_Address_Binding							
Location	V						
Presnent_Value		V	V	V	V	V	V
Status_Flags							

Property	Inverter (DEV)	Analog Input (AI)	Analog Output (AO)	Analog Value (AV)	Digital Input (BI)	Digital Output (BO)	Digital Value (BV)
Event_State							
Relibility							
Out_Of_Service							
Units		V	V	V			
Priority_Array							
Relinquish_Default							
Polarity							
Inactive_Text							
Active_Text							

5. BACnet Object Properties

This section provides the predetermined configuration of the inverter. User can achieve the optimizated situation at any necessary modification.

Refer to Table 4.1 for the property information of inverter objects and user can learn the inverter messages from the inverter objects.

Refer to Table 4.2 ~ Table 4.7 for the related object information that inverter supports. User can control/ read each object with the application requirements.

Table 4.1 – Inverter property list

Property	Inverter
Object_Identifier	DEV
Object_Name	GEFRAN BDI50
Object_Type	8
System_Status	0
Vendor_Name	GEFRAN BDI50
Vendor_ Identifier	461
Model_Name	Gefran spa
Firmware_Revision	0.14
Applocation_Software_Supported	0.14
Protocol_Version	1
Protocol_Revision	5
Protocol_Services_Supported	{ readProperty , writeProperty , who is }
Protocol_Object_Type_Supported	{ Analog_Input , Analog_Output, Analog_Value Binary_ Input, Binary_Output, Binary_Value, Device}
Max_Masters	127
Max_Info_Frames	1
Location	Italy

Table 4.2 Analog input property list (READ)

No.	Object Name	Description	Unit	Classification	Range
AI0	TM2 AVI	AVI input	Percent	R	0 - 100
AI1	TM2 ACI	ACI input	Percent	R	0 - 100
AI2	Error code	Recent fault message	No Units	R	0 –43
AI3	Freq cmd	Frequency command	HZ	R	0 - 599
AI4	Frequency	Output frequency	HZ	R	0 -599
AI5	Current	Output current	Amps	R	
AI6	Control Mode	Control mode	No Units	R	0 - 1
AI7	Motor R-Volt	Motor rated voltage	Volt	R	
AI8	Motor R-HP	Motor rated power	horsepower	R	
AI9	Motor R-RPM	Motor rated rotation speed	rpm	R	
AI10	Motor R-Hz	Motor rated frequency	HZ	R	
AI11	CarrierFreq	Carrier frequency	KiloHertz	R	1 - 16
AI12	Comm Station	INV communication station	No Units	R	1 – 32
AI13	BaudRate	Baudrate setting	No Units	R	0 – 3
AI14	BacnetSel	Communication mode selection	No Units	R	0 – 2
AI15	DevInstance	Inverter number	No Units	R	1 - 254

Table 4.3 – Analog output property list (READ/ WRITE)

No.	Object Name	Description	Unit	Classification	Range
AO0	Set Frequency	Frequency command	HZ	R/W	0 - 599
AO1	AO	Output voltage	Volt	R	0 - 10
AO3	Motor R-Amp	Motor rated current	Amps	R/W	0-65535
AO4	PwrL Sel	Momentary stop and restart selection	No Units	R	0 - 1
AO5	RestartSel	Number of Fault Auto-Restart Attempts	No Units	R	0 – 10
AO6	RestartDelay	Fault Auto-Restart Time	seconds	R	0 - 800
AO7	FreqCommand1	Speed frequency setting-stage 0	HZ	R/W	0 - 599

No.	Object Name	Description	Unit	Classification	Range
AO8	FreqCommand2	Speed frequency setting-stage 1	HZ	R/W	0 - 599
AO9	FreqCommand3	Speed frequency setting-stage 2	HZ	R/W	0 - 599
AO10	FreqCommand4	Speed frequency setting-stage 3	HZ	R/W	0 - 599
AO11	FreqCommand5	Speed frequency setting-stage 4	HZ	R/W	0 - 599
AO12	FreqCommand6	Speed frequency setting-stage 5	HZ	R/W	0 - 599
AO13	FreqCommand7	Speed frequency setting-stage 6	HZ	R/W	0 - 599
AO14	FreqCommand8	Speed frequency setting-stage 7	HZ	R/W	0 - 599
AO23	RunMode	Main run command source selection	No Units	R/W	0 - 2
AO24	ReverseOper	Direction locked command	No Units	R/W	0 - 1
AO25	StoppingSel	Stop modes selection	No Units	R/W	0 - 1
AO26	FrequenceComm	Main frequency command source selection	No Units	R/W	0 - 6
AO27	FreqUpperLim	Upper limit frequency	HZ	R/W	0.01 - 599
AO28	FreqLowerLim	Lower limit frequency	HZ	R/W	0 – 598.99
AO29	Acc Time1	Acceleration time 1	seconds	R/W	0.1 - 3600
AO30	Dec Time1	Deceleration time 1	seconds	R/W	0.1 - 3600

Table 4.4 Analog value property list (READ/ WRITE)

No.	Object Name	Description	Unit	Classification	Range
AV0	PID – P Gain	Proportional gain (P)	No Units	R/W	0 - 10
AV1	PID – I Time	Integral time (I)	No Units	R/W	0 - 100
AV2	PID – D Time	Differential time (D)	No Units	R/W	0 – 10

Table 4.5 Digital input property list (READ)

No.	Object Name	Description	Unit	Classification	Range
BI0	Run/Stop	Operation status	Stop / Run	R	0 - 1
BI1	Direction	Operation direction	FWD/REV	R	0 - 1
BI2	status	Inverter status	OK/Fault	R	0 - 1
BI3	Abnormal	Error occurs	Close/Open	R	0 - 1
BI4	DI_1 status	S1 status	Close/Open	R	0 - 1
BI5	DI_2 status	S2 status	Close/Open	R	0 - 1
BI6	DI_3 status	S3 status	Close/Open	R	0 - 1
BI7	DI_4 status	S4 status	Close/Open	R	0 - 1
BI8	DI_5 status	S5 status	Close/Open	R	0 - 1

Table 4.6 Digital output property list (READ/ WRITE)

No.	Object Name	Description	Unit	Classification	Range
BO0	RY1 status	Relay output 1 status	Close/Open	R	0 - 1

Table 4.7 Digital value property list (READ/ WRITE)

No.	Object Name	Description	Unit	Classification	Range
BV0	RUN/STOP	RUN/STOP	Stop / Run	R/W	0 - 1
BV1	FWD/REV	FWD/REV	FWD/REV	R/W	0 - 1

Appendix 4: Cable RJ45 to USB

1. Model number and specification

1.1 Model number and function instruction

Cable RJ45 to USB is a RS232 USB type to RS485 converter. It is used for communication between PC and inverter.

1.2 Dimensions (Cable RJ45 to USB 1.8m)

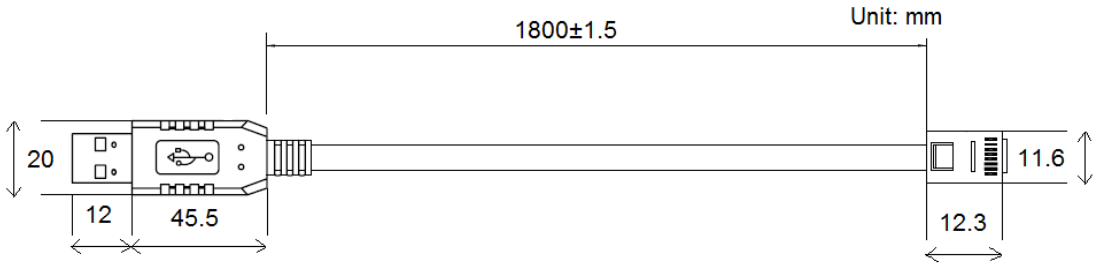

1.3 Connection between inverter and computer.

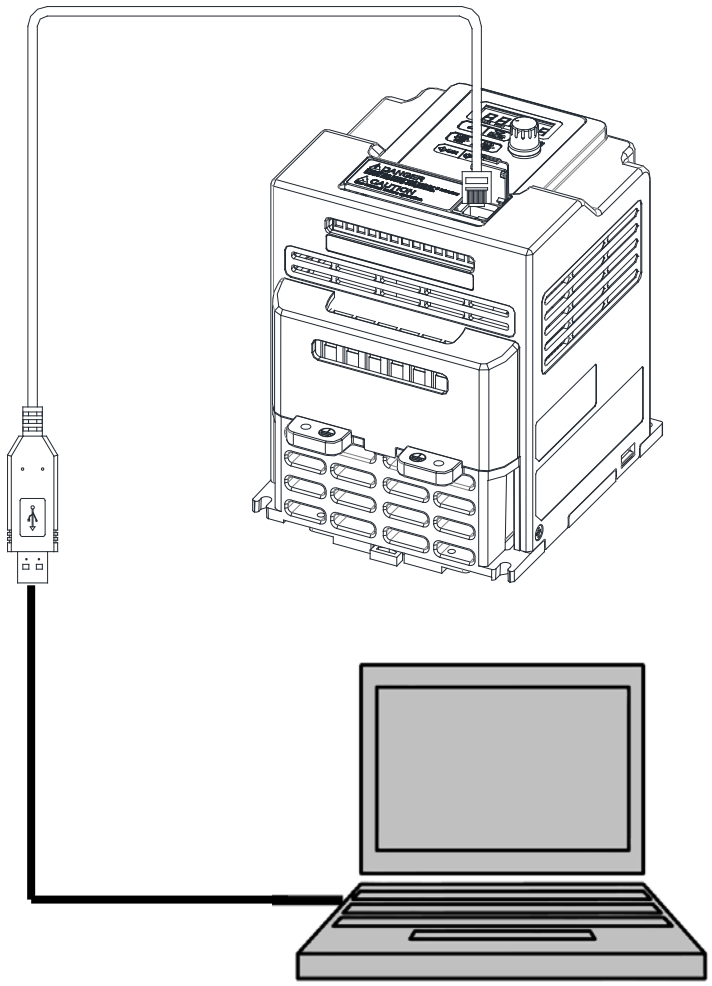

2. USB Interface Cable Pin Definition

2.1 RS232/USB at PC side.

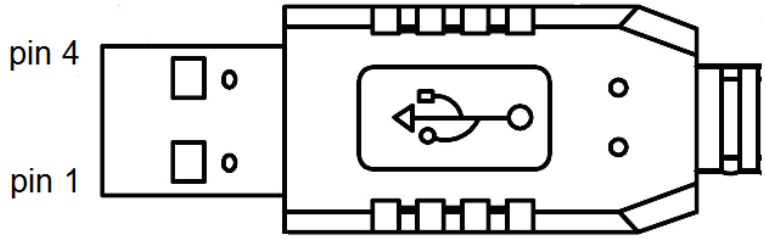

RS485/RJ45 connector at inverter side.

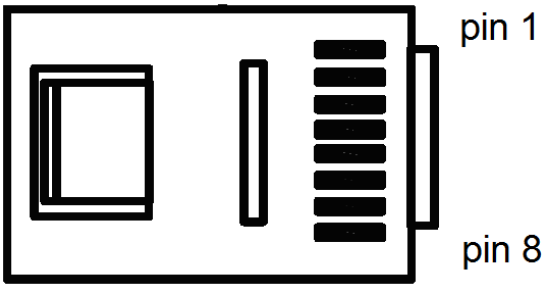

2.2 RS485/RJ45 Pin Definition.

Pin No.	Pin 1	Pin 2	Pin 3	Pin 4	Pin 5	Pin 6	Pin 7	Pin 8
Define	A	B	NC	NC	NC	NC	VCC	GND

Note:

1. A/B phase signal (Pin1&Pin2) is differential mode data signal of RS485.
2. VCC&GND is the +5Vdc power supply provided by inverter internal power source.

3. Notice

3-1. Please turn off the power before you connect the cable..

3-2. Once inverter is powered off during communication. PC software will show “communication error”.

3-3. If there is any error during communication, please check the wiring connection and restart the pc software.

Appendix 5: BDI50 series accessories manual

Accessories	Model	Function	Notes
Keypad Extension cable	**KB cable 1m**	Keypad extension cable for BDI50 series	1m
	KB cable 2m		2m
	KB cable 3m		3m
	KB cable 5m		5m
Copy module	**Memory KB-BDI/VDI**	① Duplicating parameters setting from one inverter to another inverter ② As a remote keypad to be used ③ Using RJ45 line to connect inverter	
Communication modules	**EXP-PDP-BDI/VDI**	For connection of Profibus-DP communication protocol	For BDI50 series
	EXP-TCPIP-BDI/VDI	For connection of TCP-IP communication protocol	
	EXP-DN-BDI/VDI	For connection of DeviceNet communication protocol	
	EXP-CAN-BDI/VDI	For connection of CANopen communication protocol	
RJ45 to USB connection cable	**Cable RJ45 to USB 1.8m**	Using the Gefran exclusive PC-software line	1.8m
	Cable RJ45 to USB 3m		3m

Préface

- Le produit est un lecteur conçu pour commander un moteur à induction triphasé. lire attentivement ce manuel pour garantir le bon fonctionnement, la sécurité et pour se familiariser avec les fonctions d'entraînement.
- Le lecteur est un appareil électrique / électronique et doit être installé et géré par un personnel qualifié
- Une mauvaise manipulation peut entraîner un fonctionnement incorrect, cycle de vie plus court, ou l'échec de ce produit ainsi que le moteur.
- Tous les documents sont sujets à changement sans préavis. Soyez sûr d'obtenir les dernières éditions de l'utilisation ou visitez notre site Web
- Lire le manuel d'instructions avant de procéder à l'installation, les connexions (câblage), le fonctionnement ou l'entretien et l'inspection.
- Vérifiez que vous avez une bonne connaissance de l'entraînement et de vous familiariser avec les consignes de sécurité et les précautions avant de procéder à fonctionner le lecteur.
- prêter attention aux consignes de sécurité indiquées par l'avertissement et symbole Attention .

Avertissement	ignorer les informations indiquées par le symbole d'avertissement peut entraîner la mort ou des blessures graves.
Attention	ignorer les informations indiquées par le symbole de mise en garde peut entraîner des blessures mineures ou modérées et / ou des dommages matériels importants.

Chapitre 1 Consignes de sécurité

1.1 Avant d'alimenter

Avertissement
➢ Le circuit principal doit être correctement câblée. Pour les terminaux monophasés d'approvisionnement de l'utilisation des intrants (R/L1, T/L3) et de trois bornes d'entrée de l'utilisation de l'offre de phase (R/L1, S/L2, T/L3). U/T1, V/T2, W/T3 ne doivent être utilisés pour connecter le moteur. Raccordement de l'alimentation d'entrée à l'un des U/T1, V/T2 W/T3 ou bornes risque d'endommager le lecteur.

Attention
➢ Pour éviter que le couvercle ne se désengage ou de tout autre dommage physique, ne portez pas le lecteur par son couverture. Soutenir le groupe par son dissipateur de chaleur lors du transport. Une mauvaise manipulation peut endommager le lecteur ou blesser le personnel, et doit être évitée. ➢ Pour éviter que les risques d'incendie, ne pas installer le lecteur sur ou à proximité d'objets inflammables. Installer sur des objets ininflammables comme les surfaces

métalliques.

- Si plusieurs disques sont placés dans le même panneau de contrôle, fournir une ventilation adéquate pour maintenir la température en dessous de 40 ° C/104 ° F (50 ° C/122 ° F sans housse de protection) pour éviter la surchauffe ou incendie.
- Lors d'un retrait ou d'installation de l'opérateur numérique, éteignez-le d'abord, puis de suivre les instructions de ce manuel pour éviter les erreurs de l'opérateur ou de la perte de l'affichage causé par des connexions défectueuses.

Avertissement

- Lors d'un retrait ou d'installation de l'opérateur numérique, éteignez-le d'abord, puis de suivre les instructions de ce manuel pour éviter les erreurs de l'opérateur ou de la perte de l'affichage causé par des connexions défectueuses....

1.2 Câblage

Avertissement

- Coupez toujours l'alimentation électrique avant de procéder à l'installation d'entraînement et le câblage des terminaux utilisateurs.
- Le câblage doit être effectué par un personnel qualifié / électricien certifié.
- Assurez-vous que le lecteur est correctement mis à la terre. (220V Classe: impédance de mise à la terre doit être inférieure à 100Ω Classe 440V:. Impédance de mise à la terre doit être inférieure à 10Ω.)
- vérifier et tester mes circuits d'arrêt d'urgence après le câblage. (L'Installateur est responsable du câblage.)
- Ne touchez jamais de l'entrée ou de lignes électriques de sortie permettant directement ou toute entrée ou de lignes de puissance de sortie à venir en contact avec le boîtier d'entraînement.
- Ne pas effectuer un test de tenue en tension diélectrique (mégohmmètre) sur le disque dur ou cela va entraîner des dommages de lecture pour les composants semi-conducteurs.

Attention

- La tension d'alimentation appliquée doit se conformer à la tension d'entrée spécifiée par le lecteur. (Voir la section signalétique du produit)
- Raccorder la résistance de freinage et de l'unité de freinage sur les bornes assignées.
- Ne pas brancher une résistance de freinage directement sur les bornes CC P (+) et N (-), sinon risque d'incendie.
- Utilisez des recommandations de la jauge de fil et les spécifications de couple. (Voir Wire Gauge et la section de spécification de couple) ◦
- Ne jamais brancher l'alimentation d'entrée aux bornes onduleur de sortie U/T1, V/T2, W/T3.
- Ne pas brancher un contacteur ou interrupteur en série avec le variateur et le moteur.
- Ne branchez pas un facteur condensateur de correction de puissance ou suppresseur de tension à la sortie du variateur ◦
- S'assurer que l'interférence générée par l'entraînement et le moteur n'a pas d'incidence sur les périphériques.

1.3 Avant l'opération

Avertissement

- Assurez-vous que la capacité du disque correspond aux paramètres de notation avant d'alimenter.
- Réduire le paramètre de la fréquence porteuse si le câble du variateur au moteur est supérieure à 80 pi (25 m). Un courant de haute fréquence peut être générée par la capacité parasite entre les câbles et entraîner un déclenchement de surintensité du variateur, une augmentation du courant ou d'une lecture actuelle inexactes.
- Veillez à installer tous les couvercles avant de l'allumer. Ne retirez pas les capots pendant que l'alimentation du lecteur est allumé, un choc électrique peut se produire autrement.
- Ne pas actionner d'interrupteurs avec les mains mouillées, un choc électrique pourrait survenir autrement.
- Ne touchez pas les bornes d'entraînement lorsqu'il est alimenté, même si le lecteur est arrêté, un choc électrique pourrait survenir autrement.

1.4 Configuration Paramètre

Attention

- Ne branchez pas une charge pour le moteur tout en effectuant un auto-tune.
- Assurez-vous que le moteur peut fonctionner librement et il y a suffisamment d'espace autour du moteur lors de l'exécution d'un auto-tune rotation.

1.5 Opération

Avertissement

- Veillez à installer tous les couvercles avant de l'allumer. Ne retirez pas les capots pendant que l'alimentation du lecteur est allumé, un choc électrique peut se produire autrement.
- Ne pas brancher ou débrancher le moteur pendant le fonctionnement. Le variateur pourrai se déclencher et ainsi endommager le lecteur.
- Les opérations peuvent commencer soudainement si une alarme ou un défaut est réarmé avec un ordre de marche active. Assurez-vous qu'un ordre de marche est actif lors de la réinitialisation de l'alarme ou de défaut, autrement des accidents peuvent se produire.
- Ne pas actionner d'interrupteurs avec les mains mouillées, un choc électrique pourrait survenir .
- Un interrupteur d'urgence externe indépendant est fourni, qui s'arrête en urgence vers le bas la sortie de l'onduleur en cas de danger.
- Si le redémarrage automatique après une récupération d'énergie est activée, le variateur démarrera automatiquement après le rétablissement du courant.
- Assurez-vous qu'il est sûr de faire fonctionner le variateur et le moteur avant d'effectuer un auto-tune rotation.
- Ne touchez pas les bornes d'entraînement lorsqu'il est alimenté même si l'onduleur s'est arrêté, un choc électrique pourrait survenir .
- Ne pas contrôler les signaux sur les circuits pendant que le lecteur est en marche.
- Après la mise hors tension, le ventilateur de refroidissement peut continuer à fonctionner pendant un certain temps.

Attention

- Ne touchez pas les composants générant de la chaleur tels que radiateurs et des résistances de freinage.
- Vérifiez soigneusement la performance du moteur ou de la machine avant d'utiliser à grande vitesse, sous peine de blessure.
- Notez les réglages des paramètres liés à l'unité de freinage lorsque applicable.
- Ne pas utiliser la fonction de freinage d'entraînement pour un maintien mécanique, sous peine de blessure.
- Ne pas contrôler les signaux sur les circuits pendant que le lecteur est en marche.

1.6 Entretien, Inspection et remplacement

Avertissement

- Attendre un minimum de 5 minutes après que l'alimentation a été débranchée avant de commencer une inspection. Vérifiez également que le voyant de charge est éteint et que la tension du bus cc a chuté au-dessous de 25Vdc.
- Ne jamais toucher les bornes à haute tension dans le lecteur.
- Assurez-vous que l'alimentation du lecteur est débranché avant de démonter le lecteur.
- Seul le personnel autorisé peuvent faire l'entretien, l'inspection et les opérations de remplacement. (Enlevez les bijoux en métal tels que les montres et les bagues et utiliser des outils isolés.)

Attention

- Le variateur peut être utilisé dans un environnement avec une gamme de température allant de 14 ° -104 ° F (10-40 ° C) et l'humidité relative de 95% sans condensation.
- Le variateur doit être utilisé dans un environnement sans poussière, gaz, vapeur et humidité.

1.7 Mise au rebut du variateur

Attention

- jeter cet appareil avec soin comme un déchet industriel et selon les réglementations locales nécessaires.
- Les condensateurs du circuit principal d'entraînement et circuits imprimés sont considérés comme des déchets dangereux et ne doivent pas être brûlés.
- The Plastic enclosure and parts of the drive such as the top cover board will release harmful gases if burned.

Motor over temperature protection is not provided.

Gefran worldwide

GEFRAN DEUTSCHLAND GMBH
Philipp-Reis-Straße 9a
D-63500 Seligenstadt
Ph. +49 (0) 61828090
Fax +49 (0) 6182809222
vertrieb@gefran.de

SIEI AREG - GERMANY
Gottlieb-Daimler Strasse 17/3
D-74385 - Pleidelsheim
Ph. +49 (0) 7144 897360
Fax +49 (0) 7144 8973697
info@sieiareg.de

SENSORMATE AG
Steigweg 8,
CH-8355 Aadorf, Switzerland
Ph. +41(0)52-2421818
Fax +41(0)52-3661884
http://www.sensormate.ch

GEFRAN FRANCE SA
4, rue Jean Desparmet - BP 8237
69355 LYON Cedex 08
Ph. +33 (0) 478770300
Fax +33 (0) 478770320
commercial@gefran.fr

GEFRAN BENELUX NV
ENA 23 Zone 3, nr. 3910
Lammerdries-Zuid 14A
B-2250 OLEN
Ph. +32 (0) 14248181
Fax +32 (0) 14248180
info@gefran.be

GEFRAN UK LTD
Unit 7, Brook Business Centre
54a Cowley Mill Road, Uxbridge,
UB8 2FX
Ph. +44 (0) 8452 604555
Fax +44 (0) 8452 604556
sales@gefran.co.uk

GEFRAN MIDDLE EAST ELEKTRIK VE ELEKTRONIK SAN. VE TIC. LTD. STI
Yesilkoy Mah. Ataturk
Cad. No: 12/1 B1 Blok K:12
D: 389 Bakirkoy /Istanbul
TURKIYE
Ph. +90212 465 91 21
Fax +90212 465 91 22

GEFRAN SIEI
Drives Technology Co., Ltd
No. 1285, Beihe Road, Jiading
District, Shanghai, China 201807
Ph. +86 21 69169898
Fax +86 21 69169333
info@gefran.com.cn

GEFRAN SIEI - ASIA
31 Ubi Road 1
#02-07, Aztech Building,
Singapore 408694
Ph. +65 6 8418300
Fax +65 6 7428300
info@gefran.com.sg

GEFRAN INDIA
Survey No. 191/A/1,
Chinchwad Station Road, Chinchwad,
Pune-411033, Maharashtra
Ph. +91 20 6614 6500
Fax +91 20 6614 6501
gefran.india@gefran.in

GEFRAN INC.
8 Lowell Avenue
WINCHESTER - MA 01890
Toll Free 1-888-888-4474
Fax +1 (781) 7291468
info.us@gefran.com

GEFRAN BRASIL
ELETROELETRôNICA
Avenida Dr. Altino Arantes,
377 Vila Clementino
04042-032 SÂO PAULO - SP
Ph. +55 (0) 1155851133
Fax +55 (0) 1132974012
comercial@gefran.com.br

GEFRAN

GEFRAN S.p.A.
Via Sebina 74
25050 Provaglio d'Iseo (BS)
ITALY
Ph. +39 030 98881
Fax +39 030 9839063
info@gefran.com
www.gefran.com

Drive & Motion Control Unit
Via Carducci 24
21040 Gerenzano (VA)
ITALY
Ph. +39 02 967601
Fax +39 02 9682653
infomotion@gefran.com

Technical Assistance :
technohelp@gefran.com

Customer Service :
motioncustomer@gefran.com
Ph. +39 02 96760500
Fax +39 02 96760278